Honeywell | Honeywell Sensing and Productivity Solutions

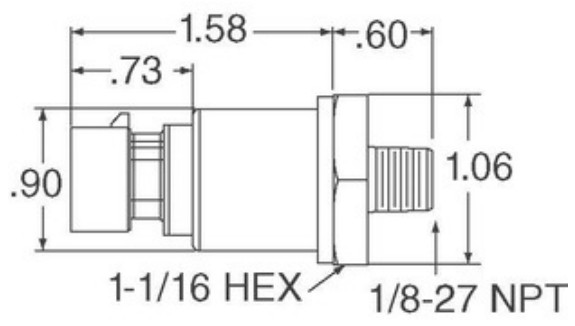

Image may be representation. See specifications for product details.

MLH01KPSL01A

Part Number:	MLH01KPSL01A
Manufacturer/Brand:	Honeywell Sensing and Productivity Solutions
Product description	SENSOR SEALED GAUGE 0-1000 PSI
Datasheets:	1.MLH01KPSL01A.pdf 2.MLH01KPSL01A.pdf
RoHs Status	Lead free / RoHS Compliant
Stock Condition	4244 pcs stock
Ship From	Hong Kong
Shipment Way	DHL/Fedex/TNT/UPS/EMS

REQUEST FOR QUOTATION

Specifications of MLH01KPSL01A

PART NUMBER	MLH01KPSL01A
MANUFACTURER	Honeywell Sensing and Productivity Solutions
DESCRIPTION	SENSOR SEALED GAUGE 0-1000 PSI
LEAD FREE STATUS / ROHS STATUS	Lead free / RoHS Compliant
QUANTITY AVAILABLE	4244 pcs
DATA SHEET	1.MLH01KPSL01A.pdf 2.MLH01KPSL01A.pdf
VOLTAGE - SUPPLY	5 V ~ 6 V
TERMINATION STYLE	Cable 1m
SUPPLIER DEVICE PACKAGE	-
SERIES	MLH
PRESSURE TYPE	Sealed Gauge
PORT STYLE	Threaded
PORT SIZE	Male - 1/4" (6.35mm) NPT
PACKAGE / CASE	Cylinder, Metal
OUTPUT TYPE	Analog Voltage
OUTPUT	0.5 V ~ 4.5 V
OPERATING TEMPERATURE	-40°C ~ 125°C
OPERATING PRESSURE	1000 PSI (6894.76 kPa)
MOISTURE SENSITIVITY LEVEL (MSL)	1 (Unlimited)
MAXIMUM PRESSURE	2000 PSI (13789.51 kPa)
LEAD FREE STATUS / ROHS STATUS	Lead free / RoHS Compliant
FEATURES	Amplified Output, Temperature Compensated
DETAILED DESCRIPTION	Pressure Sensor 1000 PSI (6894.76 kPa) Sealed Gauge Male - 1/4" (6.35mm) NPT 0.5 V ~ 4.5 V Cylinder, Metal
ACCURACY	±0.25%

Related Tags

Honeywell Sensing and Productivity Solutions MLH01KPSL01A	MLH01KPSL01A Distributor	MLH01KPSL01A Supplier
MLH01KPSL01A Price	MLH01KPSL01A Pictures	MLH01KPSL01A Image
MLH01KPSL01A PDF Datasheet	MLH01KPSL01A Download Datasheet	MLH01KPSL01A Datasheet
MLH01KPSL01A Stock	Buy MLH01KPSL01A	Buy Honeywell Sensing and Productivity Solutions MLH01KPSL01A
Honeywell Sensing and Productivity Solutions MLH01KPSL01A	Honeywell Sensing and Productivity Solutions Supplier	Honeywell Sensing and Productivity Solutions Distributor
Honeywell Sensing and Productivity Solutions MLH01KPSL01A	HONEYWELL MLH01KPSL01A	Honeywell Sensing and Control EMEA MLH01KPSL01A
Honeywell Sensing and Productivity Solutions T&M MLH01KPSL01A		

Related Products

MLH01KPST04A
Manufacturers: Honeywell Sensing and Productivity Solutions
Description: MLH ALL METAL PRESS SENSE -ATF
In stock: 862 pcs
RFQ

MLH01KPSD01A
Manufacturers: Honeywell Sensing and Productivity Solutions
Description: MLH ALL METAL PRESS SENSE -ATF
In stock: 2810 pcs
RFQ

MLH01KPSM06A
Manufacturers: Honeywell Sensing and Productivity Solutions
Description: SENSOR SEALED GAUGE 0-1000 PSI
In stock: 763 pcs
RFQ

MLH025BGD14B
Manufacturers: Honeywell Sensing and Productivity Solutions
Description: SENSOR GAUGE 0-25 BAR
In stock: 944 pcs
RFQ

MLH01KPSP06C
Manufacturers: Honeywell Sensing and Productivity Solutions
Description: SENSOR SEALED GAUGE 0-1000 PSI
In stock: 4937 pcs
RFQ

MLH01KPSC06A
Manufacturers: Honeywell Sensing and Productivity Solutions
Description: MLH ALL METAL PRESS SENSE -ATF
In stock: 3338 pcs
RFQ

MLH01KPSB06G
Manufacturers: Honeywell Sensing and Productivity Solutions
Description: MLH ALL METAL PRESS SENSE -ATF
In stock: 3723 pcs
RFQ

MLH025BGB20B
Manufacturers: Honeywell Sensing and Productivity Solutions
Description: MLH ALL METAL PRESS SENSE -ATF
In stock: 860 pcs
RFQ

MLH01KPSB06E
Manufacturers: Honeywell Sensing and Productivity Solutions
Description: MLH ALL METAL PRESS SENSE -ATF
In stock: 843 pcs
RFQ

MLH01KPSB06B
Manufacturers: Honeywell Sensing and Productivity Solutions
Description: SENSOR AMP 1000PSI 4-20MA OUT
In stock: 782 pcs
RFQ

MLH020BST10A
Manufacturers: Honeywell Sensing and Productivity Solutions
Description: SENSOR SEALED GAUGE 0-20 BAR
In stock: 1098 pcs
RFQ

MLH01KPSB21A
Manufacturers: Honeywell Sensing and Productivity Solutions
Description: MLH ALL METAL PRESS SENSE -ATF
In stock: 908 pcs
RFQ

Copyright © 2020 Reliable Distributor of Electronic Components
E-mail: Info@infinity-electronic.com
Address: 17F, Gaylord Commercial Building, 114-118 Lockhart Road, Wan Chai, Hong Kong