Honeywell | Honeywell Sensing and Productivity Solutions

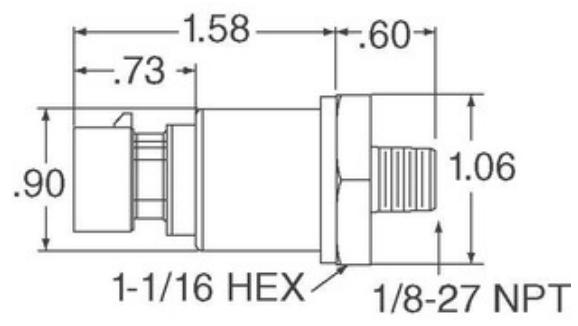

Image may be representation. See specifications for product details.

MLH050PGG20B

Part Number:	MLH050PGG20B
Manufacturer/Brand:	Honeywell Sensing and Productivity Solutions
Product description	MLH ALL METAL PRESS SENSE -ATF
Datasheets:	1.MLH050PGG20B.pdf 2.MLH050PGG20B.pdf
RoHs Status	Lead free / RoHS Compliant
Stock Condition	1003 pcs stock
Ship From	Hong Kong
Shipment Way	DHL/Fedex/TNT/UPS/EMS

REQUEST FOR QUOTATION

Specifications of MLH050PGG20B

PART NUMBER	MLH050PGG20B
MANUFACTURER	Honeywell Sensing and Productivity Solutions
DESCRIPTION	MLH ALL METAL PRESS SENSE -ATF
LEAD FREE STATUS / ROHS STATUS	Lead free / RoHS Compliant
QUANTITY AVAILABLE	1003 pcs
DATA SHEET	1.MLH050PGG20B.pdf 2.MLH050PGG20B.pdf
VOLTAGE - SUPPLY	9.5 V ~ 30 V
SUPPLIER DEVICE PACKAGE	-
SERIES	MLH
PRESSURE TYPE	Vented Gauge
PORT STYLE	Threaded
PORT SIZE	Male - M20 x 1.5
PACKAGE / CASE	Cylinder, Metal
OUTPUT TYPE	Analog Current
OUTPUT	4 mA ~ 20 mA
OPERATING TEMPERATURE	-40°C ~ 125°C
OPERATING PRESSURE	50 PSI (344.74 kPa)
MOISTURE SENSITIVITY LEVEL (MSL)	1 (Unlimited)
MAXIMUM PRESSURE	150 PSI (1034.21 kPa)
LEAD FREE STATUS / ROHS STATUS	Lead free / RoHS Compliant
FEATURES	Amplified Output, Temperature Compensated
DETAILED DESCRIPTION	Pressure Sensor 50 PSI (344.74 kPa) Vented Gauge Male - M20 x 1.5 4 mA ~ 20 mA Cylinder, Metal
ACCURACY	±0.25%

Related Tags

- Honeywell Sensing and Productivity Solutions MLH050PGG20B
- MLH050PGG20B Distributor
- MLH050PGG20B Supplier
- MLH050PGG20B Price
- MLH050PGG20B Pictures
- MLH050PGG20B Image
- MLH050PGG20B PDF Datasheet
- MLH050PGG20B Download Datasheet
- MLH050PGG20B Datasheet
- MLH050PGG20B Stock
- Buy MLH050PGG20B
- Buy Honeywell Sensing and Productivity Solutions MLH050PGG20B
- Honeywell Sensing and Productivity Solutions MLH050PGG20B
- Honeywell Sensing and Productivity Solutions Supplier
- Honeywell Sensing and Productivity Solutions Distributor
- Honeywell Sensing and Productivity Solutions MLH050PGG20B
- HONEYWELL MLH050PGG20B
- Honeywell Sensing and Control EMEA MLH050PGG20B
- Honeywell Sensing and Productivity Solutions T&M MLH050PGG20B

Related Products

MLH050PGP06C
Manufacturers: Honeywell Sensing and Productivity Solutions
Description: SENSOR AMP 50PSI 1-6VDC OUT
In stock: 987 pcs
RFQ

MLH050PGB06A
Manufacturers: Honeywell Sensing and Productivity Solutions
Description: SENSOR AMP 50PSI .5-4.5VDC OUT
In stock: 824 pcs
RFQ

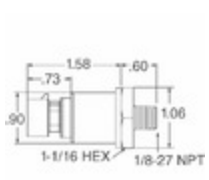

MLH050PGB20B
Manufacturers: Honeywell Sensing and Productivity Solutions
Description: MLH ALL METAL PRESS SENSE -ATF
In stock: 1048 pcs
RFQ

MLH050PGM01B
Manufacturers: Honeywell Sensing and Productivity Solutions
Description: MLH ALL METAL PRESS SENSE -ATF
In stock: 753 pcs
RFQ

MLH050PGP06A
Manufacturers: Honeywell Sensing and Productivity Solutions
Description: SENSOR AMP 50PSI .5-4.5VDC OUT
In stock: 921 pcs
RFQ

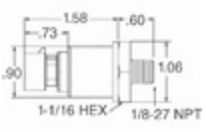

MLH050PGB13A
Manufacturers: Honeywell Sensing and Productivity Solutions
Description: SENSOR GAUGE 0-50 PSI
In stock: 1051 pcs
RFQ

MLH050PGL06A
Manufacturers: Honeywell Sensing and Productivity Solutions
Description: MLH ALL METAL PRESS SENSE -ATF
In stock: 3052 pcs
RFQ

MLH050PGB01E
Manufacturers: Honeywell Sensing and Productivity Solutions
Description: SENSOR AMP 50PSI .5-4.5VDC OUT
In stock: 2944 pcs
RFQ

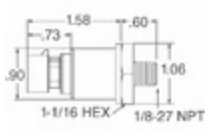

MLH050PGT01B
Manufacturers: Honeywell Sensing and Productivity Solutions
Description: MLH ALL METAL PRESS SENSE -ATF
In stock: 1126 pcs
RFQ

MLH050PGL06E
Manufacturers: Honeywell Sensing and Productivity Solutions
Description: PRESSURE SENSOR
In stock: 4266 pcs
RFQ

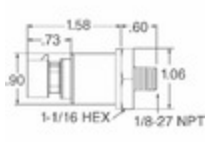

MLH050PGD01B
Manufacturers: Honeywell Sensing and Productivity Solutions
Description: MLH ALL METAL PRESS SENSE -ATF
In stock: 1009 pcs
RFQ

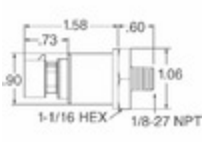

MLH050PGB02A
Manufacturers: Honeywell Sensing and Productivity Solutions
Description: SENSOR GAUGE 0-50 PSI
In stock: 5254 pcs
RFQ

Copyright © 2020 Reliable Distributor of Electronic Components

E-mail: Info@infinity-electronic.com
Address: 17F, Gaylord Commercial Building, 114-118 Lockhart Road, Wan Chai, Hong Kong