Honeywell | Honeywell Sensing and Productivity Solutions

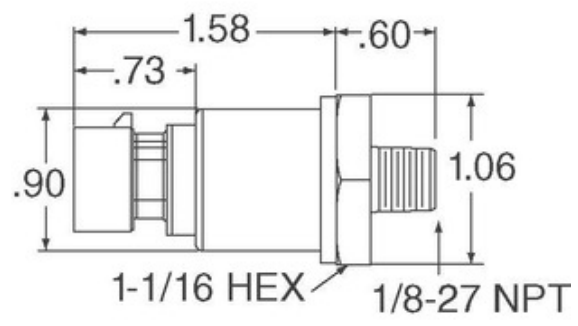

Image may be representation. See specifications for product details.

MLH02KPST10E

Part Number:	MLH02KPST10E
Manufacturer/Brand:	Honeywell Sensing and Productivity Solutions
Product description	MLH ALL METAL PRESS SENSE -ATF
Datasheets:	1.MLH02KPST10E.pdf 2.MLH02KPST10E.pdf
RoHs Status	Lead free / RoHS Compliant
Stock Condition	5542 pcs stock
Ship From	Hong Kong
Shipment Way	DHL/Fedex/TNT/UPS/EMS

REQUEST FOR QUOTATION

Specifications of MLH02KPST10E

PART NUMBER	MLH02KPST10E
MANUFACTURER	Honeywell Sensing and Productivity Solutions
DESCRIPTION	MLH ALL METAL PRESS SENSE -ATF
LEAD FREE STATUS / ROHS STATUS	Lead free / RoHS Compliant
QUANTITY AVAILABLE	5542 pcs
DATA SHEET	1.MLH02KPST10E.pdf 2.MLH02KPST10E.pdf
VOLTAGE - SUPPLY	7 V ~ 30 V
SUPPLIER DEVICE PACKAGE	-
SERIES	MLH
PRESSURE TYPE	Sealed Gauge
PORT STYLE	Threaded
PORT SIZE	Male - 7/16" (11.11mm) UNF
PACKAGE / CASE	Cylinder, Metal
OUTPUT TYPE	Analog Voltage
OUTPUT	0.5 V ~ 4.5 V
OPERATING TEMPERATURE	-40°C ~ 125°C
OPERATING PRESSURE	2000 PSI (13789.51 kPa)
MOISTURE SENSITIVITY LEVEL (MSL)	1 (Unlimited)
MAXIMUM PRESSURE	4000 PSI (27579.03 kPa)
LEAD FREE STATUS / ROHS STATUS	Lead free / RoHS Compliant
FEATURES	Amplified Output, Temperature Compensated
DETAILED DESCRIPTION	Pressure Sensor 2000 PSI (13789.51 kPa) Sealed Gauge Male - 7/16" (11.11mm) UNF 0.5 V ~ 4.5 V Cylinder, Metal
ACCURACY	±0.25%

Related Tags

- Honeywell Sensing and Productivity Solutions MLH02KPST10E
- MLH02KPST10E Distributor
- MLH02KPST10E Supplier
- MLH02KPST10E Price
- MLH02KPST10E Pictures
- MLH02KPST10E Image
- MLH02KPST10E PDF Datasheet
- MLH02KPST10E Download Datasheet
- MLH02KPST10E Datasheet
- MLH02KPST10E Stock
- Buy MLH02KPST10E
- Buy Honeywell Sensing and Productivity Solutions MLH02KPST10E
- Honeywell Sensing and Productivity Solutions MLH02KPST10E
- Honeywell Sensing and Productivity Solutions Supplier
- Honeywell Sensing and Productivity Solutions Distributor
- Honeywell Sensing and Productivity Solutions MLH02KPST10E
- HONEYWELL MLH02KPST10E
- Honeywell Sensing and Control EMEA MLH02KPST10E
- Honeywell Sensing and Productivity Solutions T&M MLH02KPST10E

Related Products

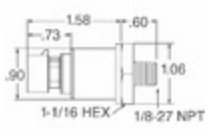

MLH03KPGL01C
Manufacturers: Honeywell Sensing and Productivity Solutions
Description: MLH ALL METAL PRESS SENSE -ATF
In stock: 4834 pcs
RFQ

MLH03KPGB01B
Manufacturers: Honeywell Sensing and Productivity Solutions
Description: SENSOR AMP 3000PSI 4-20MA OUT
In stock: 773 pcs
RFQ

MLH03KPSB01B
Manufacturers: Honeywell Sensing and Productivity Solutions
Description: SENSOR AMP 3000PSI 4-20MA OUT
In stock: 762 pcs
RFQ

MLH02KPSL01A
Manufacturers: Honeywell Sensing and Productivity Solutions
Description: SENSOR SEALED GAUGE 0-2000 PSI
In stock: 934 pcs
RFQ

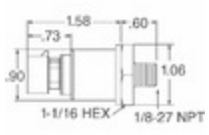

MLH02KPSM06A
Manufacturers: Honeywell Sensing and Productivity Solutions
Description: SENSOR SEALED GAUGE 0-2000 PSI
In stock: 3989 pcs
RFQ

MLH02KPSL06A
Manufacturers: Honeywell Sensing and Productivity Solutions
Description: MLH ALL METAL PRESS SENSE -ATF
In stock: 889 pcs
RFQ

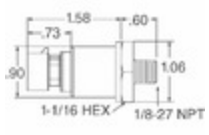

MLH03KPSB01C
Manufacturers: Honeywell Sensing and Productivity Solutions
Description: MLH ALL METAL PRESS SENSE -ATF
In stock: 5884 pcs
RFQ

MLH03KPSB01A
Manufacturers: Honeywell Sensing and Productivity Solutions
Description: SENSOR AMP 3000PSI .5-4.5VDC OUT
In stock: 855 pcs
RFQ

MLH03KPSB01G
Manufacturers: Honeywell Sensing and Productivity Solutions
Description: SENSOR AMP 3000PSI 1-5VDC OUT
In stock: 786 pcs
RFQ

MLH02KPSP01B
Manufacturers: Honeywell Sensing and Productivity Solutions
Description: SENSOR AMP 2000PSI 4-20MA OUT
In stock: 860 pcs
RFQ

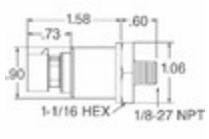

MLH02KPSG06A
Manufacturers: Honeywell Sensing and Productivity Solutions
Description: MLH ALL METAL PRESS SENSE -ATF
In stock: 1138 pcs
RFQ

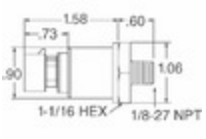

MLH02KPSD01A
Manufacturers: Honeywell Sensing and Productivity Solutions
Description: MLH ALL METAL PRESS SENSE -ATF
In stock: 4839 pcs
RFQ

Copyright © 2020 Reliable Distributor of Electronic Components

E-mail: Info@infinity-electronic.com
Address: 17F, Gaylord Commercial Building, 114-118 Lockhart Road, Wan Chai, Hong Kong