Honeywell | Honeywell Sensing and Productivity Solutions

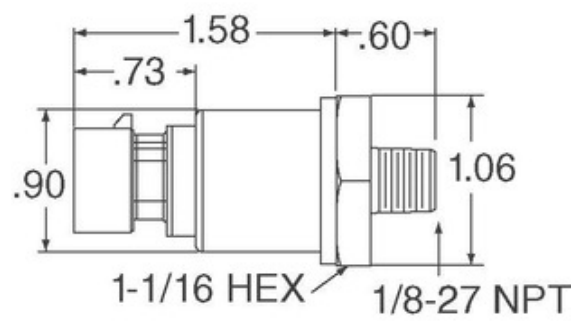

Image may be representation. See specifications for product details.

MLH550BSD14E

Part Number:	MLH550BSD14E
Manufacturer/Brand:	Honeywell Sensing and Productivity Solutions
Product description	SENSOR SEALED GAUGE 0-550 BAR
Datasheets:	1.MLH550BSD14E.pdf 2.MLH550BSD14E.pdf
RoHs Status	Lead free / RoHS Compliant
Stock Condition	991 pcs stock
Ship From	Hong Kong
Shipment Way	DHL/Fedex/TNT/UPS/EMS

REQUEST FOR QUOTATION

Specifications of MLH550BSD14E

PART NUMBER	MLH550BSD14E
MANUFACTURER	Honeywell Sensing and Productivity Solutions
DESCRIPTION	SENSOR SEALED GAUGE 0-550 BAR
LEAD FREE STATUS / ROHS STATUS	Lead free / RoHS Compliant
QUANTITY AVAILABLE	991 pcs
DATA SHEET	1.MLH550BSD14E.pdf 2.MLH550BSD14E.pdf
VOLTAGE - SUPPLY	7 V ~ 30 V
TERMINATION STYLE	M12
SUPPLIER DEVICE PACKAGE	-
SERIES	MLH
PRESSURE TYPE	Sealed Gauge
PORT STYLE	Threaded
PORT SIZE	Male - 1/4" (6.35mm) BSP
PACKAGE / CASE	Cylinder, Metal
OUTPUT TYPE	Analog Voltage
OUTPUT	0.5 V ~ 4.5 V
OPERATING TEMPERATURE	-40°C ~ 125°C
OPERATING PRESSURE	7977.08 PSI (55000 kPa)
MOISTURE SENSITIVITY LEVEL (MSL)	1 (Unlimited)
MAXIMUM PRESSURE	11965.61 PSI (82500 kPa)
LEAD FREE STATUS / ROHS STATUS	Lead free / RoHS Compliant
FEATURES	Amplified Output, Temperature Compensated
DETAILED DESCRIPTION	Pressure Sensor 7977.08 PSI (55000 kPa) Sealed Gauge Male - 1/4" (6.35mm) BSP 0.5 V ~ 4.5 V Cylinder, Metal
ACCURACY	±0.25%

Related Tags

Honeywell Sensing and Productivity Solutions MLH550BSD14E	MLH550BSD14E Distributor	MLH550BSD14E Supplier
MLH550BSD14E Price	MLH550BSD14E Pictures	MLH550BSD14E Image
MLH550BSD14E PDF Datasheet	MLH550BSD14E Download Datasheet	MLH550BSD14E Datasheet
MLH550BSD14E Stock	Buy MLH550BSD14E	Buy Honeywell Sensing and Productivity Solutions MLH550BSD14E
Honeywell Sensing and Productivity Solutions MLH550BSD14E	Honeywell Sensing and Productivity Solutions Supplier	Honeywell Sensing and Productivity Solutions Distributor
Honeywell Sensing and Productivity Solutions MLH550BSD14E	HONEYWELL MLH550BSD14E	Honeywell Sensing and Control EMEA MLH550BSD14E
Honeywell Sensing and Productivity Solutions T&M MLH550BSD14E		

Related Products

MLH700PSB09D
Manufacturers: Honeywell Sensing and Productivity Solutions
Description: MLH ALL METAL PRESS SENSE -ATF
In stock: 982 pcs
RFQ

MLH600PSB01A
Manufacturers: Honeywell Sensing and Productivity Solutions
Description: MLH ALL METAL PRESS SENSE -ATF
In stock: 3882 pcs
RFQ

MLH500PST10A
Manufacturers: Honeywell Sensing and Productivity Solutions
Description: SENSOR AMP 500PSI .5-4.5VDC OUT
In stock: 1021 pcs
RFQ

MLH550BSB01A
Manufacturers: Honeywell Sensing and Productivity Solutions
Description: MLH ALL METAL PRESS SENSE -ATF
In stock: 6071 pcs
RFQ

MLH700PSB09A
Manufacturers: Honeywell Sensing and Productivity Solutions
Description: MLH ALL METAL PRESS SENSE -ATF
In stock: 4176 pcs
RFQ

MLH500PST12E
Manufacturers: Honeywell Sensing and Productivity Solutions
Description: MLH ALL METAL PRESS SENSE -ATF
In stock: 945 pcs
RFQ

MLH600PSM09B
Manufacturers: Honeywell Sensing and Productivity Solutions
Description: SENSOR SEALED GAUGE 0-600 PSI
In stock: 3243 pcs
RFQ

MLH550BST01A
Manufacturers: Honeywell Sensing and Productivity Solutions
Description: MLH ALL METAL PRESS SENSE -ATF
In stock: 5265 pcs
RFQ

MLH500PST06A
Manufacturers: Honeywell Sensing and Productivity Solutions
Description: MLH ALL METAL PRESS SENSE -ATF
In stock: 989 pcs
RFQ

MLH550BSD14C
Manufacturers: Honeywell Sensing and Productivity Solutions
Description: SENSOR SEALED GAUGE 0-550 BAR
In stock: 807 pcs
RFQ

MLH600PSB09A
Manufacturers: Honeywell Sensing and Productivity Solutions
Description: SENSOR SEALED GAUGE 0-600 PSI
In stock: 3293 pcs
RFQ

MLH500PST02A
Manufacturers: Honeywell Sensing and Productivity Solutions
Description: MLH ALL METAL PRESS SENSE -ATF
In stock: 966 pcs
RFQ

Copyright © 2020 Reliable Distributor of Electronic Components

E-mail: Info@infinity-electronic.com
Address: 17F, Gaylord Commercial Building, 114-118 Lockhart Road, Wan Chai, Hong Kong