Honeywell | Honeywell Sensing and Productivity Solutions

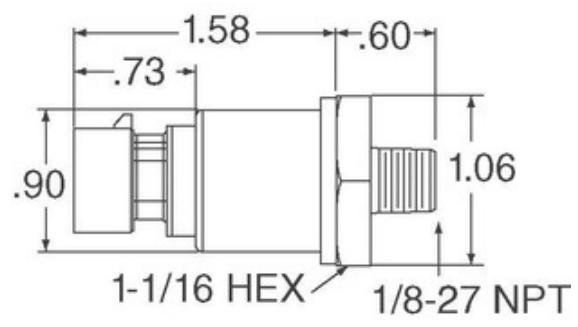

Image may be representation. See specifications for product details.

MLH500BSD08E

Part Number:	MLH500BSD08E
Manufacturer/Brand:	Honeywell Sensing and Productivity Solutions
Product description	SENSOR SEALED GAUGE 0-500 BAR
Datasheets:	1.MLH500BSD08E.pdf 2.MLH500BSD08E.pdf
RoHs Status	Lead free / RoHS Compliant
Stock Condition	5088 pcs stock
Ship From	Hong Kong
Shipment Way	DHL/Fedex/TNT/UPS/EMS

REQUEST FOR QUOTATION

Specifications of MLH500BSD08E

PART NUMBER	MLH500BSD08E
MANUFACTURER	Honeywell Sensing and Productivity Solutions
DESCRIPTION	SENSOR SEALED GAUGE 0-500 BAR
LEAD FREE STATUS / ROHS STATUS	Lead free / RoHS Compliant
QUANTITY AVAILABLE	5088 pcs
DATA SHEET	1.MLH500BSD08E.pdf 2.MLH500BSD08E.pdf
VOLTAGE - SUPPLY	7 V ~ 30 V
TERMINATION STYLE	M12
SUPPLIER DEVICE PACKAGE	-
SERIES	MLH
PRESSURE TYPE	Sealed Gauge
PORT STYLE	Threaded
PORT SIZE	Male - M10 x 1
PACKAGE / CASE	Cylinder, Metal
OUTPUT TYPE	Analog Voltage
OUTPUT	0.5 V ~ 4.5 V
OPERATING TEMPERATURE	-40°C ~ 125°C
OPERATING PRESSURE	7251.89 PSI (50000 kPa)
MOISTURE SENSITIVITY LEVEL (MSL)	1 (Unlimited)
MAXIMUM PRESSURE	10877.83 PSI (75000 kPa)
LEAD FREE STATUS / ROHS STATUS	Lead free / RoHS Compliant
FEATURES	Amplified Output, Temperature Compensated
DETAILED DESCRIPTION	Pressure Sensor 7251.89 PSI (50000 kPa) Sealed Gauge Male - M10 x 1 0.5 V ~ 4.5 V Cylinder, Metal
ACCURACY	±0.25%

Related Tags

Honeywell Sensing and Productivity Solutions MLH500BSD08E	MLH500BSD08E Distributor	MLH500BSD08E Supplier
MLH500BSD08E Price	MLH500BSD08E Pictures	MLH500BSD08E Image
MLH500BSD08E PDF Datasheet	MLH500BSD08E Download Datasheet	MLH500BSD08E Datasheet
MLH500BSD08E Stock	Buy MLH500BSD08E	Buy Honeywell Sensing and Productivity Solutions MLH500BSD08E
Honeywell Sensing and Productivity Solutions MLH500BSD08E	Honeywell Sensing and Productivity Solutions Supplier	Honeywell Sensing and Productivity Solutions Distributor
Honeywell Sensing and Productivity Solutions MLH500BSD08E	HONEYWELL MLH500BSD08E	Honeywell Sensing and Control EMEA MLH500BSD08E
Honeywell Sensing and Productivity Solutions T&M MLH500BSD08E		

Related Products

MLH500BSD14B
Manufacturers: Honeywell Sensing and Productivity Solutions
Description: SENSOR SEALED GAUGE 0-500 BAR
In stock: 1050 pcs
RFQ

MLH400PSB06G
Manufacturers: Honeywell Sensing and Productivity Solutions
Description: SENSOR SEALED GAUGE 0-400 PSI
In stock: 5926 pcs
RFQ

MLH400BSB01D
Manufacturers: Honeywell Sensing and Productivity Solutions
Description: MLH ALL METAL PRESS SENSE -ATF
In stock: 3860 pcs
RFQ

MLH500BSB14B
Manufacturers: Honeywell Sensing and Productivity Solutions
Description: SENSOR SEALED GAUGE 0-500 BAR
In stock: 897 pcs
RFQ

MLH500BSB14A
Manufacturers: Honeywell Sensing and Productivity Solutions
Description: SENSOR SEALED GAUGE 0-500 BAR
In stock: 6569 pcs
RFQ

MLH500BSG14D
Manufacturers: Honeywell Sensing and Productivity Solutions
Description: MLH ALL METAL PRESS SENSE -ATF
In stock: 853 pcs
RFQ

MLH400BSB01A
Manufacturers: Honeywell Sensing and Productivity Solutions
Description: MLH ALL METAL PRESS SENSE -ATF
In stock: 3106 pcs
RFQ

MLH500PAB01A
Manufacturers: Honeywell Sensing and Productivity Solutions
Description: SENSOR AMP 500PSI .5-4.5VDC OUT
In stock: 5733 pcs
RFQ

MLH500BSH08A
Manufacturers: Honeywell Sensing and Productivity Solutions
Description: MLH ALL METAL PRESS SENSE -ATF
In stock: 1118 pcs
RFQ

MLH500BST14A
Manufacturers: Honeywell Sensing and Productivity Solutions
Description: SENSOR SEALED GAUGE 0-500 BAR
In stock: 965 pcs
RFQ

MLH500PGL01G
Manufacturers: Honeywell Sensing and Productivity Solutions
Description: SENSOR AMP 500PSI 1-5VDC OUT
In stock: 752 pcs
RFQ

MLH400BSB01B
Manufacturers: Honeywell Sensing and Productivity Solutions
Description: MLH ALL METAL PRESS SENSE -ATF
In stock: 1107 pcs
RFQ

Copyright © 2020 Reliable Distributor of Electronic Components

E-mail: Info@infinity-electronic.com
Address: 17F, Gaylord Commercial Building, 114-118 Lockhart Road, Wan Chai, Hong Kong