Honeywell | Honeywell Sensing and Productivity Solutions

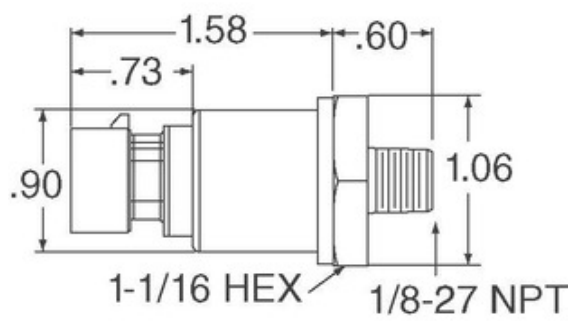

Image may be representation. See specifications for product details.

MLH400BSB01A

Part Number:	MLH400BSB01A
Manufacturer/Brand:	Honeywell Sensing and Productivity Solutions
Product description	MLH ALL METAL PRESS SENSE -ATF
Datasheets:	1.MLH400BSB01A.pdf 2.MLH400BSB01A.pdf
RoHs Status	Lead free / RoHS Compliant
Stock Condition	3106 pcs stock
Ship From	Hong Kong
Shipment Way	DHL/Fedex/TNT/UPS/EMS

REQUEST FOR QUOTATION

Specifications of MLH400BSB01A

PART NUMBER	MLH400BSB01A
MANUFACTURER	Honeywell Sensing and Productivity Solutions
DESCRIPTION	MLH ALL METAL PRESS SENSE -ATF
LEAD FREE STATUS / ROHS STATUS	Lead free / RoHS Compliant
QUANTITY AVAILABLE	3106 pcs
DATA SHEET	1.MLH400BSB01A.pdf 2.MLH400BSB01A.pdf
VOLTAGE - SUPPLY	5 V ~ 6 V
SUPPLIER DEVICE PACKAGE	-
SERIES	MLH
PRESSURE TYPE	Sealed Gauge
PORT STYLE	Threaded
PORT SIZE	Male - 1/4" (6.35mm) NPT
PACKAGE / CASE	Cylinder, Metal
OUTPUT TYPE	Analog Voltage
OUTPUT	0.5 V ~ 4.5 V
OPERATING TEMPERATURE	-40°C ~ 125°C
OPERATING PRESSURE	5801.51 PSI (40000 kPa)
MOISTURE SENSITIVITY LEVEL (MSL)	1 (Unlimited)
MAXIMUM PRESSURE	-
LEAD FREE STATUS / ROHS STATUS	Lead free / RoHS Compliant
FEATURES	Amplified Output, Temperature Compensated
DETAILED DESCRIPTION	Pressure Sensor 5801.51 PSI (40000 kPa) Sealed Gauge Male - 1/4" (6.35mm) NPT 0.5 V ~ 4.5 V Cylinder, Metal
ACCURACY	±0.25%

Related Tags

Honeywell Sensing and Productivity Solutions MLH400BSB01A	MLH400BSB01A Distributor	MLH400BSB01A Supplier
MLH400BSB01A Price	MLH400BSB01A Pictures	MLH400BSB01A Image
MLH400BSB01A PDF Datasheet	MLH400BSB01A Download Datasheet	MLH400BSB01A Datasheet
MLH400BSB01A Stock	Buy MLH400BSB01A	Buy Honeywell Sensing and Productivity Solutions MLH400BSB01A
Honeywell Sensing and Productivity Solutions MLH400BSB01A	Honeywell Sensing and Productivity Solutions Supplier	Honeywell Sensing and Productivity Solutions Distributor
Honeywell Sensing and Productivity Solutions MLH400BSB01A	HONEYWELL MLH400BSB01A	Honeywell Sensing and Control EMEA MLH400BSB01A
Honeywell Sensing and Productivity Solutions T&M MLH400BSB01A		

Related Products

MLH400BSB01B
Manufacturers: Honeywell Sensing and Productivity Solutions
Description: MLH ALL METAL PRESS SENSE -ATF
In stock: 1107 pcs
RFQ

MLH400PSB06G
Manufacturers: Honeywell Sensing and Productivity Solutions
Description: SENSOR SEALED GAUGE 0-400 PSI
In stock: 5926 pcs
RFQ

MLH350BST07E
Manufacturers: Honeywell Sensing and Productivity Solutions
Description: MLH ALL METAL PRESS SENSE -ATF
In stock: 916 pcs
RFQ

MLH350BSL15E
Manufacturers: Honeywell Sensing and Productivity Solutions
Description: SENSOR SEALED GAUGE 0-350 BAR
In stock: 4519 pcs
RFQ

MLH500BSB14B
Manufacturers: Honeywell Sensing and Productivity Solutions
Description: SENSOR SEALED GAUGE 0-500 BAR
In stock: 897 pcs
RFQ

MLH350BSL14A
Manufacturers: Honeywell Sensing and Productivity Solutions
Description: MLH ALL METAL PRESS SENSE -ATF
In stock: 863 pcs
RFQ

MLH350BST13E
Manufacturers: Honeywell Sensing and Productivity Solutions
Description: MLH ALL METAL PRESS SENSE -ATF
In stock: 3234 pcs
RFQ

MLH500BSD08E
Manufacturers: Honeywell Sensing and Productivity Solutions
Description: SENSOR SEALED GAUGE 0-500 BAR
In stock: 5088 pcs
RFQ

MLH350BST12E
Manufacturers: Honeywell Sensing and Productivity Solutions
Description: MLH ALL METAL PRESS SENSE -ATF
In stock: 966 pcs
RFQ

MLH350PSB09A
Manufacturers: Honeywell Sensing and Productivity Solutions
Description: MLH ALL METAL PRESS SENSE -ATF
In stock: 3067 pcs
RFQ

MLH500BSB14A
Manufacturers: Honeywell Sensing and Productivity Solutions
Description: SENSOR SEALED GAUGE 0-500 BAR
In stock: 6569 pcs
RFQ

MLH400BSB01D
Manufacturers: Honeywell Sensing and Productivity Solutions
Description: MLH ALL METAL PRESS SENSE -ATF
In stock: 3860 pcs
RFQ

Copyright © 2020 Reliable Distributor of Electronic Components

E-mail: Info@infinity-electronic.com
Address: 17F, Gaylord Commercial Building, 114-118 Lockhart Road, Wan Chai, Hong Kong