Honeywell | Honeywell Sensing and Productivity Solutions

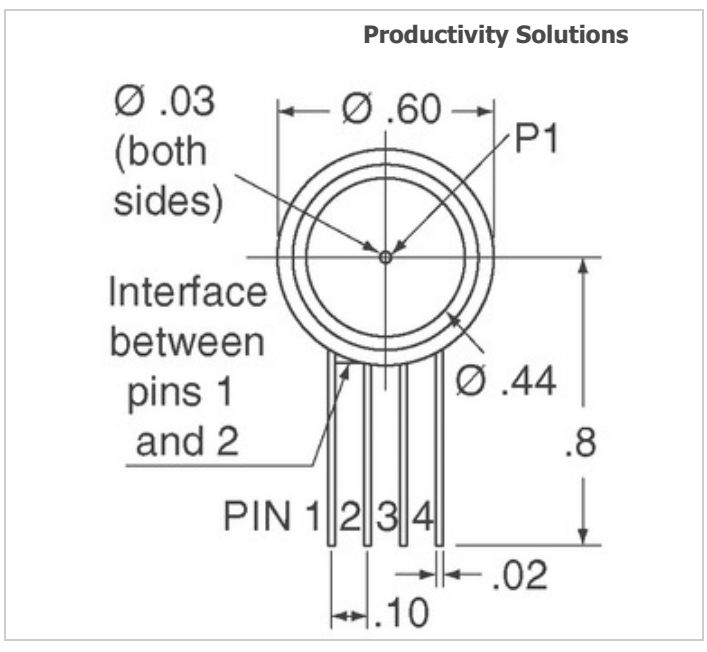

Image may be representation. See specifications for product details.

XPX15DT

Part Number:	XPX15DT
Manufacturer/Brand:	Honeywell Sensing and Productivity Solutions
Product description	XPX DIFF GAUGE VACCUM GAUGE
Datasheets:	1.XPX15DT.pdf 2.XPX15DT.pdf
RoHs Status	Lead free / RoHS Compliant
Stock Condition	5336 pcs stock
Ship From	Hong Kong
Shipment Way	DHL/Fedex/TNT/UPS/EMS

REQUEST FOR QUOTATION

Specifications of XPX15DT

PART NUMBER	XPX15DT
MANUFACTURER	Honeywell Sensing and Productivity Solutions
DESCRIPTION	XPX DIFF GAUGE VACCUM GAUGE
LEAD FREE STATUS / ROHS STATUS	Lead free / RoHS Compliant
QUANTITY AVAILABLE	5336 pcs
DATA SHEET	1.XPX15DT.pdf 2.XPX15DT.pdf
VOLTAGE - SUPPLY	3 V ~ 12 V
SUPPLIER DEVICE PACKAGE	-
SERIES	XPX
PRESSURE TYPE	Differential
PORT STYLE	Barbed
PORT SIZE	Male - 0.19" (4.83mm) Tube, Dual
PACKAGE / CASE	4-SIP Module
OUTPUT TYPE	Wheatstone Bridge
OUTPUT	0 mV ~ 262.5 mV (5V)
OPERATING TEMPERATURE	-25°C ~ 85°C
OPERATING PRESSURE	15 PSI (103.42 kPa)
MOISTURE SENSITIVITY LEVEL (MSL)	1 (Unlimited)
MAXIMUM PRESSURE	45 PSI (310.26 kPa)
LEAD FREE STATUS / ROHS STATUS	Lead free / RoHS Compliant
FEATURES	-
DETAILED DESCRIPTION	Pressure Sensor 15 PSI (103.42 kPa) Differential Male - 0.19" (4.83mm) Tube, Dual 0 mV ~ 262.5 mV (5V) 4-SIP Module
ACCURACY	±1%

Related Tags

Honeywell Sensing and Productivity Solutions XPX15DT	XPX15DT Distributor	XPX15DT Supplier
XPX15DT Price	XPX15DT Pictures	XPX15DT Image
XPX15DT PDF Datasheet	XPX15DT Download Datasheet	XPX15DT Datasheet
XPX15DT Stock	Buy XPX15DT	Buy Honeywell Sensing and Productivity Solutions XPX15DT
Honeywell Sensing and Productivity Solutions XPX15DT	Honeywell Sensing and Productivity Solutions Supplier	Honeywell Sensing and Productivity Solutions Distributor
Honeywell Sensing and Productivity Solutions XPX15DT	HONEYWELL XPX15DT	Honeywell Sensing and Control EMEA XPX15DT
Honeywell Sensing and Productivity Solutions T&M XPX15DT		

Related Products

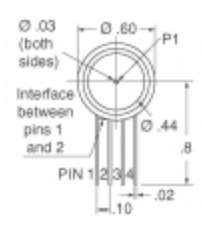

XPX100D
Manufacturers: Honeywell Sensing and Productivity Solutions
Description: XPX DIFF GAUGE VACCUM GAUGE
In stock: 6774 pcs
RFQ

XPX150D
Manufacturers: Honeywell Sensing and Productivity Solutions
Description: SENSOR DIFF VACUUM GAUGE 150PSI
In stock: 2829 pcs
RFQ

P61-1000-A-A-I18-5V-C
Manufacturers: SSI Technologies, Inc.
Description: SENSOR 1000PSIA 1/4 NPT W/TEMP
In stock: 595 pcs
RFQ

XPX100DT
Manufacturers: Honeywell Sensing and Productivity Solutions
Description: SENSOR DIFF VACUUM GAUGE 100PSI
In stock: 3021 pcs
RFQ

XPX100GFS
Manufacturers: Honeywell Sensing and Productivity Solutions
Description: SENSOR VACUUM GAUGE 100PSI
In stock: 6423 pcs
RFQ

ABPMAND001PG2A3
Manufacturers: Honeywell Sensing and Productivity Solutions
Description: SENSOR PRESSURE 1 PSIG
In stock: 6623 pcs
RFQ

P51-300-S-G-I12-4.5OVP-000-000
Manufacturers: SSI Technologies, Inc.
Description: SENSOR 300PSI 1/8-27NPT .5-4.5V
In stock: 734 pcs
RFQ

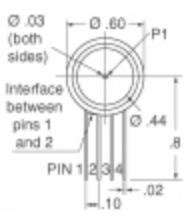

XPXL10DT
Manufacturers: Honeywell Sensing and Productivity Solutions
Description: SENSOR PRESS DIFF 10" H2O 4SIP
In stock: 5879 pcs
RFQ

P51-75-S-F-I12-4.5OVP-000-000
Manufacturers: SSI Technologies, Inc.
Description: SENSOR 75PSI 1/4-18NPT .5-4.5V
In stock: 662 pcs
RFQ

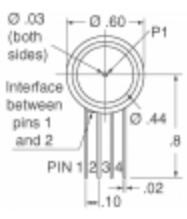

XPX15GFS
Manufacturers: Honeywell Sensing and Productivity Solutions
Description: XPX GAUGE VACUUM GAUGE SIGNAL
In stock: 4872 pcs
RFQ

XPX30DT
Manufacturers: Honeywell Sensing and Productivity Solutions
Description: XPX DIFF GAUGE VACCUM GAUGE
In stock: 4450 pcs
RFQ

XPX01D
Manufacturers: Honeywell Sensing and Productivity Solutions
Description: SENSOR DIFF VACUUM GAUGE 1PSI
In stock: 3519 pcs
RFQ

Copyright © 2020 Reliable Distributor of Electronic Components

E-mail: Info@infinity-electronic.com
Address: 17F, Gaylord Commercial Building, 114-118 Lockhart Road, Wan Chai, Hong Kong