Honeywell | Honeywell Sensing and Productivity Solutions

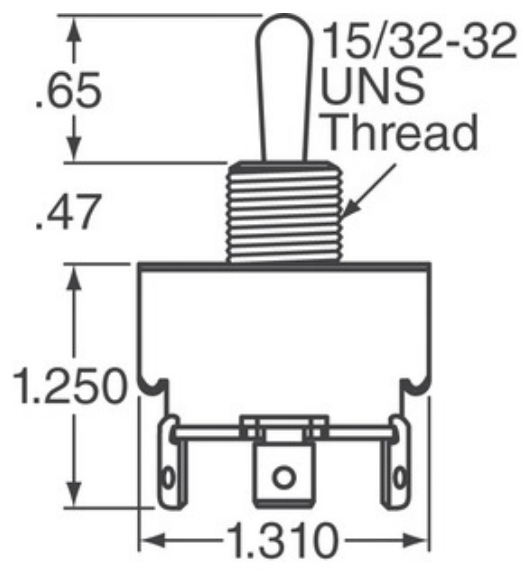

Image may be representation. See specifications for product details.

12TS95-4

Part Number:	12TS95-4
Manufacturer/Brand:	Honeywell Sensing and Productivity Solutions
Product description	SWITCH TOGGLE DPST-NC 20A 125V
Datasheets:	1.12TS95-4.pdf 2.12TS95-4.pdf
RoHs Status	Lead free / RoHS Compliant
Stock Condition	7056 pcs stock
Ship From	Hong Kong
Shipment Way	DHL/Fedex/TNT/UPS/EMS

REQUEST FOR QUOTATION

Specifications of 12TS95-4

PART NUMBER	12TS95-4
MANUFACTURER	Honeywell Sensing and Productivity Solutions
DESCRIPTION	SWITCH TOGGLE DPST-NC 20A 125V
LEAD FREE STATUS / ROHS STATUS	Lead free / RoHS Compliant
QUANTITY AVAILABLE	7056 pcs
DATA SHEET	1.12TS95-4.pdf 2.12TS95-4.pdf
VOLTAGE RATING - AC	125V
TERMINATION STYLE	Quick Connect - 0.250" (6.3mm)
SWITCH FUNCTION	On-Mom
SERIES	TS
PANEL CUTOUT DIMENSIONS	Circular - 12.40mm Dia
PACKAGING	Bulk
OTHER NAMES	480-3073
OPERATING TEMPERATURE	-54°C ~ 71°C
MOUNTING TYPE	Panel Mount
MOISTURE SENSITIVITY LEVEL (MSL)	1 (Unlimited)
LEAD FREE STATUS / ROHS STATUS	Lead free / RoHS Compliant
INGRESS PROTECTION	-
ILLUMINATION VOLTAGE (NOMINAL)	-
ILLUMINATION TYPE, COLOR	-
ILLUMINATION	Non-Illuminated
FEATURES	-
ELECTRICAL LIFE	-
DETAILED DESCRIPTION	Toggle Switch DPST-NC Panel Mount
CURRENT RATING	20A (AC)
CIRCUIT	DPST-NC
BUSHING THREAD	15/32-32
ACTUATOR TYPE	Standard Round
ACTUATOR MATERIAL	Nickel Plated
ACTUATOR LENGTH	16.51mm

Related Tags

Honeywell Sensing and Productivity Solutions 12TS95-4	12TS95-4 Distributor	12TS95-4 Supplier
12TS95-4 Price	12TS95-4 Pictures	12TS95-4 Image
12TS95-4 PDF Datasheet	12TS95-4 Download Datasheet	12TS95-4 Datasheet
12TS95-4 Stock	Buy 12TS95-4	Buy Honeywell Sensing and Productivity Solutions 12TS95-4
Honeywell Sensing and Productivity Solutions 12TS95-4	Honeywell Sensing and Productivity Solutions Supplier	Honeywell Sensing and Productivity Solutions Distributor
Honeywell Sensing and Productivity Solutions 12TS95-4	HONEYWELL 12TS95-4	Honeywell Sensing and Control EMEA 12TS95-4
Honeywell Sensing and Productivity Solutions T&M 12TS95-4		

Related Products

12TS95-5
Manufacturers: Honeywell Sensing and Productivity Solutions
Description: SWITCH TOGGLE DPDT 20A 125V
In stock: 4670 pcs
RFQ

12TS95-2
Manufacturers: Honeywell Sensing and Productivity Solutions
Description: SWITCH TOGGLE DPST 20A 125V
In stock: 9719 pcs
RFQ

12TS95127-7
Manufacturers: Honeywell Sensing and Productivity Solutions
Description: SWITCH TOGGLE DPDT 10A 125V
In stock: 2650 pcs
RFQ

12TS95-3
Manufacturers: Honeywell Sensing and Productivity Solutions
Description: SWITCH TOGGLE DPDT 20A 125V
In stock: 9961 pcs
RFQ

12TS95-70
Manufacturers: Honeywell Sensing and Productivity Solutions
Description: SWITCH TOGGLE DPDT 20A 125V
In stock: 2681 pcs
RFQ

12TS15-7
Manufacturers: Honeywell Sensing and Productivity Solutions
Description: SWITCH TOGGLE DPDT 20A 125V
In stock: 5560 pcs
RFQ

12TTS08
Manufacturers: Electro-Films (EFI) / Vishay
Description: SCR PHASE CNTRL 800V 12A TO220AC
In stock: 3724 pcs
RFQ

12TS15-8
Manufacturers: Honeywell Sensing and Productivity Solutions
Description: SWITCH TOGGLE DPDT 20A 125V
In stock: 6468 pcs
RFQ

12TS95127-3
Manufacturers: Honeywell Sensing and Productivity Solutions
Description: SWITCH TOGGLE DPDT 15A 125V
In stock: 3847 pcs
RFQ

12TS95-10
Manufacturers: Honeywell Sensing and Productivity Solutions
Description: SWITCH TOGGLE DPDT 20A 125V
In stock: 3184 pcs
RFQ

12TS95-7
Manufacturers: Honeywell Sensing and Productivity Solutions
Description: SWITCH TOGGLE DPDT 20A 125V
In stock: 2890 pcs
RFQ

12TS95-1
Manufacturers: Honeywell Sensing and Productivity Solutions
Description: SWITCH TOGGLE DPDT 20A 125V
In stock: 9193 pcs
RFQ

Copyright © 2020 Reliable Distributor of Electronic Components

E-mail: Info@infinity-electronic.com
Address: 17F, Gaylord Commercial Building, 114-118 Lockhart Road, Wan Chai, Hong Kong