Honeywell | Honeywell Sensing and Productivity Solutions

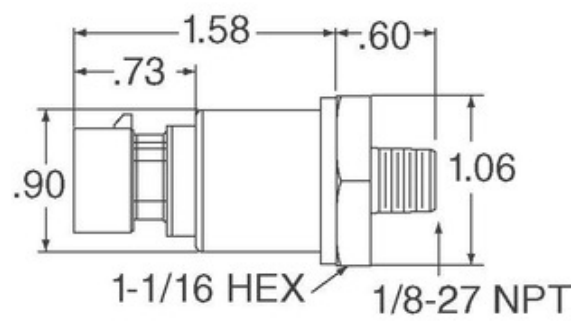

Image may be representation. See specifications for product details.

MLH040BSD14B

Part Number:	MLH040BSD14B
Manufacturer/Brand:	Honeywell Sensing and Productivity Solutions
Product description	SENSOR SEALED GAUGE 0-40 BAR
Datasheets:	1.MLH040BSD14B.pdf 2.MLH040BSD14B.pdf
RoHs Status	Lead free / RoHS Compliant
Stock Condition	3522 pcs stock
Ship From	Hong Kong
Shipment Way	DHL/Fedex/TNT/UPS/EMS

REQUEST FOR QUOTATION

Specifications of MLH040BSD14B

PART NUMBER	MLH040BSD14B
MANUFACTURER	Honeywell Sensing and Productivity Solutions
DESCRIPTION	SENSOR SEALED GAUGE 0-40 BAR
LEAD FREE STATUS / ROHS STATUS	Lead free / RoHS Compliant
QUANTITY AVAILABLE	3522 pcs
DATA SHEET	1.MLH040BSD14B.pdf 2.MLH040BSD14B.pdf
VOLTAGE - SUPPLY	9.5 V ~ 30 V
TERMINATION STYLE	M12
SUPPLIER DEVICE PACKAGE	-
SERIES	MLH
PRESSURE TYPE	Sealed Gauge
PORT STYLE	Threaded
PORT SIZE	Male - 1/4" (6.35mm) BSP
PACKAGE / CASE	Cylinder, Metal
OUTPUT TYPE	Analog Current
OUTPUT	4 mA ~ 20 mA
OPERATING TEMPERATURE	-40°C ~ 125°C
OPERATING PRESSURE	580.15 PSI (4000 kPa)
MOISTURE SENSITIVITY LEVEL (MSL)	1 (Unlimited)
MAXIMUM PRESSURE	1160.3 PSI (8000 kPa)
LEAD FREE STATUS / ROHS STATUS	Lead free / RoHS Compliant
FEATURES	Amplified Output, Temperature Compensated
DETAILED DESCRIPTION	Pressure Sensor 580.15 PSI (4000 kPa) Sealed Gauge Male - 1/4" (6.35mm) BSP 4 mA ~ 20 mA Cylinder, Metal
ACCURACY	±0.25%

Related Tags

Honeywell Sensing and Productivity Solutions MLH040BSD14B	MLH040BSD14B Distributor	MLH040BSD14B Supplier
MLH040BSD14B Price	MLH040BSD14B Pictures	MLH040BSD14B Image
MLH040BSD14B PDF Datasheet	MLH040BSD14B Download Datasheet	MLH040BSD14B Datasheet
MLH040BSD14B Stock	Buy MLH040BSD14B	Buy Honeywell Sensing and Productivity Solutions MLH040BSD14B
Honeywell Sensing and Productivity Solutions MLH040BSD14B	Honeywell Sensing and Productivity Solutions Supplier	Honeywell Sensing and Productivity Solutions Distributor
Honeywell Sensing and Productivity Solutions MLH040BSD14B	HONEYWELL MLH040BSD14B	Honeywell Sensing and Control EMEA MLH040BSD14B
Honeywell Sensing and Productivity Solutions T&M MLH040BSD14B		

Related Products

MLH040BSG17B
Manufacturers: Honeywell Sensing and Productivity Solutions
Description: MLH ALL METAL PRESS SENSE -ATF
In stock: 862 pcs
RFQ

MLH040BSG02B
Manufacturers: Honeywell Sensing and Productivity Solutions
Description: MLH ALL METAL PRESS SENSE -ATF
In stock: 4624 pcs
RFQ

MLH040BSB09A
Manufacturers: Honeywell Sensing and Productivity Solutions
Description: SENSOR SEALED GAUGE 0-40 BAR
In stock: 3057 pcs
RFQ

MLH040BGD10B
Manufacturers: Honeywell Sensing and Productivity Solutions
Description: SENSOR GAUGE 0-40 BAR
In stock: 1125 pcs
RFQ

MLH040BSD14E
Manufacturers: Honeywell Sensing and Productivity Solutions
Description: SENSOR SEALED GAUGE 0-40 BAR
In stock: 3224 pcs
RFQ

MLH040BSD14A
Manufacturers: Honeywell Sensing and Productivity Solutions
Description: SENSOR SEALED GAUGE 0-40 BAR
In stock: 1077 pcs
RFQ

MLH040BGD09B
Manufacturers: Honeywell Sensing and Productivity Solutions
Description: SENSOR GAUGE 0-40 BAR
In stock: 6158 pcs
RFQ

MLH040BSG13E
Manufacturers: Honeywell Sensing and Productivity Solutions
Description: MLH ALL METAL PRESS SENSE -ATF
In stock: 6668 pcs
RFQ

MLH040BSB01B
Manufacturers: Honeywell Sensing and Productivity Solutions
Description: SENSOR SEALED GAUGE 0-40 BAR
In stock: 938 pcs
RFQ

MLH040BSG01B
Manufacturers: Honeywell Sensing and Productivity Solutions
Description: SENSOR SEALED GAUGE 0-40 BAR
In stock: 6971 pcs
RFQ

MLH040BSG13B
Manufacturers: Honeywell Sensing and Productivity Solutions
Description: MLH ALL METAL PRESS SENSE -ATF
In stock: 3899 pcs
RFQ

MLH040BGH01A
Manufacturers: Honeywell Sensing and Productivity Solutions
Description: SENSOR GAUGE 0-40 BAR
In stock: 1024 pcs
RFQ

Copyright © 2020 Reliable Distributor of Electronic Components

E-mail: Info@infinity-electronic.com
Address: 17F, Gaylord Commercial Building, 114-118 Lockhart Road, Wan Chai, Hong Kong