Honeywell | Honeywell Sensing and Productivity Solutions

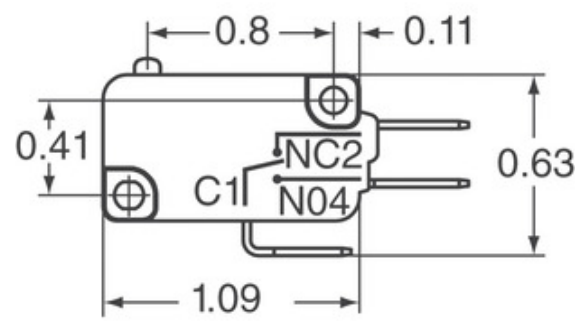

Image may be representation. See specifications for product details.

V15T16-EZ200A01-K

Part Number:	V15T16-EZ200A01-K
Manufacturer/Brand:	Honeywell Sensing and Productivity Solutions
Product description	SWITCH SNAP ACTION SPDT 16A 250V
Datasheets:	1.V15T16-EZ200A01-K.pdf 2.V15T16-EZ200A01-K.pdf 3.V15T16-EZ200A01-K.pdf
RoHs Status	Lead free / RoHS Compliant
Stock Condition	68887 pcs stock
Ship From	Hong Kong
Shipment Way	DHL/Fedex/TNT/UPS/EMS

REQUEST FOR QUOTATION

Specifications of V15T16-EZ200A01-K

PART NUMBER	V15T16-EZ200A01-K
MANUFACTURER	Honeywell Sensing and Productivity Solutions
DESCRIPTION	SWITCH SNAP ACTION SPDT 16A 250V
LEAD FREE STATUS / ROHS STATUS	Lead free / RoHS Compliant
QUANTITY AVAILABLE	68887 pcs
DATA SHEET	1.V15T16-EZ200A01-K.pdf 2.V15T16-EZ200A01-K.pdf 3.V15T16-EZ200A01-K.pdf
VOLTAGE RATING - AC	250V
TERMINATION STYLE	Quick Connect - 0.187" (4.7mm)
SWITCH FUNCTION	On-Mom
SERIES	V15
RELEASE FORCE	50gf
PRETRAVEL	0.063" (1.6mm)
PACKAGING	Bulk
OVERTRAVEL	0.030" (0.76mm)
OPERATING TEMPERATURE	-25°C ~ 125°C
OPERATING POSITION	0.602" (15.3mm)
OPERATING FORCE	200gf
MOUNTING TYPE	Chassis Mount
MOISTURE SENSITIVITY LEVEL (MSL)	1 (Unlimited)
MECHANICAL LIFE	5,000,000 Cycles
LEAD FREE STATUS / ROHS STATUS	Lead free / RoHS Compliant
INGRESS PROTECTION	-
FEATURES	-
ELECTRICAL LIFE	50,000 Cycles
DIFFERENTIAL TRAVEL	0.016" (0.4mm)
CURRENT RATING	16A (AC)
CIRCUIT	SPDT
ACTUATOR TYPE	Lever, Straight

Related Tags

Honeywell Sensing and Productivity Solutions V15T16-EZ200A01-K	V15T16-EZ200A01-K Distributor	V15T16-EZ200A01-K Supplier
V15T16-EZ200A01-K Price	V15T16-EZ200A01-K Pictures	V15T16-EZ200A01-K Image
V15T16-EZ200A01-K PDF Datasheet	V15T16-EZ200A01-K Download Datasheet	V15T16-EZ200A01-K Datasheet
V15T16-EZ200A01-K Stock	Buy V15T16-EZ200A01-K	Buy Honeywell Sensing and Productivity Solutions V15T16-EZ200A01-K
Honeywell Sensing and Productivity Solutions V15T16-EZ200A01-K	Honeywell Sensing and Productivity Solutions Supplier	Honeywell Sensing and Productivity Solutions Distributor
Honeywell Sensing and Productivity Solutions V15T16-EZ200A01-K	HONEYWELL V15T16-EZ200A01-K	Honeywell Sensing and Control EMEA V15T16-EZ200A01-K
Honeywell Sensing and Productivity Solutions T&M V15T16-EZ200A01-K		

Related Products

V15T16-EZ100A03
Manufacturers: Honeywell Sensing and Productivity Solutions
Description: SWITCH STRT LEVER SPDT 16A 250V
In stock: 29355 pcs
RFQ

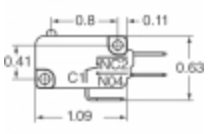

V15T16-EZ200A02-K
Manufacturers: Honeywell Sensing and Productivity Solutions
Description: SWITCH SNAP ACTION SPDT 16A 250V
In stock: 56650 pcs
RFQ

V15T16-EZ200A01
Manufacturers: Honeywell Sensing and Productivity Solutions
Description: BASIC SWITCH V BASICS V15
In stock: 3271 pcs
RFQ

V15T16-EZ200
Manufacturers: Honeywell Sensing and Productivity Solutions
Description: BASIC SWITCH V BASICS V15
In stock: 53187 pcs
RFQ

V15T16-EZ200A04
Manufacturers: Honeywell Sensing and Productivity Solutions
Description: BASIC SWITCH V BASICS V15
In stock: 52170 pcs
RFQ

V15T16-EZ100A06
Manufacturers: Honeywell Sensing and Productivity Solutions
Description: SWITCH ROLLR LEVER SPDT 16A 250V
In stock: 29153 pcs
RFQ

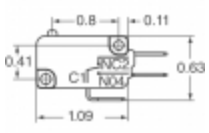

V15T16-EZ200A04-K
Manufacturers: Honeywell Sensing and Productivity Solutions
Description: SWITCH SNAP ACTION SPDT 16A 250V
In stock: 47759 pcs
RFQ

V15T16-EZ200A03-K
Manufacturers: Honeywell Sensing and Productivity Solutions
Description: SWITCH SNAP ACTION SPDT 16A 250V
In stock: 27360 pcs
RFQ

V15T16-EZ200A05
Manufacturers: Honeywell Sensing and Productivity Solutions
Description: BASIC SWITCH V BASICS V15
In stock: 59221 pcs
RFQ

V15T16-EZ200-K
Manufacturers: Honeywell Sensing and Productivity Solutions
Description: SWITCH SNAP ACTION SPDT 16A 250V
In stock: 26333 pcs
RFQ

V15T16-EZ100A05
Manufacturers: Honeywell Sensing and Productivity Solutions
Description: SWITCH ROLLR LEVER SPDT 16A 250V
In stock: 24009 pcs
RFQ

V15T16-EZ200A02
Manufacturers: Honeywell Sensing and Productivity Solutions
Description: BASIC SWITCH V BASICS V15
In stock: 69039 pcs
RFQ

Copyright © 2020 Reliable Distributor of Electronic Components

E-mail: Info@infinity-electronic.com
Address: 17F, Gaylord Commercial Building, 114-118 Lockhart Road, Wan Chai, Hong Kong