Honeywell | Honeywell Sensing and Productivity Solutions

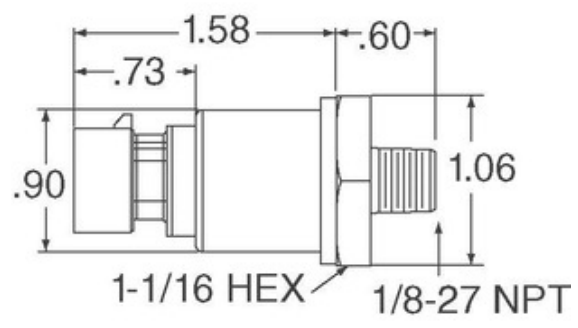

Image may be representation. See specifications for product details.

MLH300PSG01G

Part Number:	MLH300PSG01G
Manufacturer/Brand:	Honeywell Sensing and Productivity Solutions
Product description	MLH ALL METAL PRESS SENSE -ATF
Datasheets:	1.MLH300PSG01G.pdf 2.MLH300PSG01G.pdf
RoHs Status	Lead free / RoHS Compliant
Stock Condition	6020 pcs stock
Ship From	Hong Kong
Shipment Way	DHL/Fedex/TNT/UPS/EMS

REQUEST FOR QUOTATION

Specifications of MLH300PSG01G

PART NUMBER	MLH300PSG01G
MANUFACTURER	Honeywell Sensing and Productivity Solutions
DESCRIPTION	MLH ALL METAL PRESS SENSE -ATF
LEAD FREE STATUS / ROHS STATUS	Lead free / RoHS Compliant
QUANTITY AVAILABLE	6020 pcs
DATA SHEET	1.MLH300PSG01G.pdf 2.MLH300PSG01G.pdf
VOLTAGE - SUPPLY	8 V ~ 30 V
TERMINATION STYLE	Connector
SUPPLIER DEVICE PACKAGE	-
SERIES	MLH
PRESSURE TYPE	Sealed Gauge
PORT STYLE	Threaded
PORT SIZE	Male - 1/4" (6.35mm) NPT
PACKAGE / CASE	Cylinder, Metal
OUTPUT TYPE	Analog Voltage
OUTPUT	1 V ~ 5 V
OPERATING TEMPERATURE	-40°C ~ 125°C
OPERATING PRESSURE	300 PSI (2068.43 kPa)
MOISTURE SENSITIVITY LEVEL (MSL)	1 (Unlimited)
MAXIMUM PRESSURE	900 PSI (6205.28 kPa)
LEAD FREE STATUS / ROHS STATUS	Lead free / RoHS Compliant
FEATURES	Amplified Output, Temperature Compensated
DETAILED DESCRIPTION	Pressure Sensor 300 PSI (2068.43 kPa) Sealed Gauge Male - 1/4" (6.35mm) NPT 1 V ~ 5 V Cylinder, Metal
ACCURACY	±0.25%

Related Tags

Honeywell Sensing and Productivity Solutions MLH300PSG01G	MLH300PSG01G Distributor	MLH300PSG01G Supplier
MLH300PSG01G Price	MLH300PSG01G Pictures	MLH300PSG01G Image
MLH300PSG01G PDF Datasheet	MLH300PSG01G Download Datasheet	MLH300PSG01G Datasheet
MLH300PSG01G Stock	Buy MLH300PSG01G	Buy Honeywell Sensing and Productivity Solutions MLH300PSG01G
Honeywell Sensing and Productivity Solutions MLH300PSG01G	Honeywell Sensing and Productivity Solutions Supplier	Honeywell Sensing and Productivity Solutions Distributor
Honeywell Sensing and Productivity Solutions MLH300PSG01G	HONEYWELL MLH300PSG01G	Honeywell Sensing and Control EMEA MLH300PSG01G
Honeywell Sensing and Productivity Solutions T&M MLH300PSG01G		

Related Products

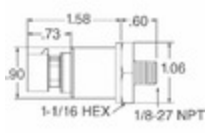

MLH300PSB06A
Manufacturers: Honeywell Sensing and Productivity Solutions
Description: SENSOR SEALED GAUGE 0-300 PSI
In stock: 5735 pcs
RFQ

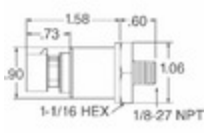

MLH300PSM01B
Manufacturers: Honeywell Sensing and Productivity Solutions
Description: MLH ALL METAL PRESS SENSE -ATF
In stock: 3339 pcs
RFQ

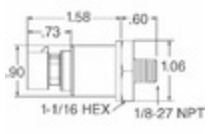

MLH300PST01A
Manufacturers: Honeywell Sensing and Productivity Solutions
Description: SENSOR SEALED GAUGE 0-300 PSI
In stock: 3387 pcs
RFQ

MLH300PSL06A
Manufacturers: Honeywell Sensing and Productivity Solutions
Description: SENSOR SEALED GAUGE 0-300 PSI
In stock: 1023 pcs
RFQ

MLH300PSB09E
Manufacturers: Honeywell Sensing and Productivity Solutions
Description: SENSOR AMP 300PSI .5-4.5VDC OUT
In stock: 995 pcs
RFQ

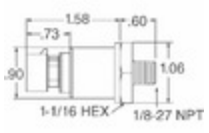

MLH300PSB06B
Manufacturers: Honeywell Sensing and Productivity Solutions
Description: MLH ALL METAL PRESS SENSE -ATF
In stock: 4320 pcs
RFQ

MLH350BSB01E
Manufacturers: Honeywell Sensing and Productivity Solutions
Description: MLH ALL METAL PRESS SENSE -ATF
In stock: 4564 pcs
RFQ

MLH300PSB09B
Manufacturers: Honeywell Sensing and Productivity Solutions
Description: MLH ALL METAL PRESS SENSE -ATF
In stock: 4313 pcs
RFQ

MLH300PSB09A
Manufacturers: Honeywell Sensing and Productivity Solutions
Description: SENSOR AMP 300PSI .5-4.5VDC OUT
In stock: 4092 pcs
RFQ

MLH300PSD13B
Manufacturers: Honeywell Sensing and Productivity Solutions
Description: MLH ALL METAL PRESS SENSE -ATF
In stock: 6413 pcs
RFQ

MLH300PSL06B
Manufacturers: Honeywell Sensing and Productivity Solutions
Description: MLH ALL METAL PRESS SENSE -ATF
In stock: 2768 pcs
RFQ

MLH350BSB14D
Manufacturers: Honeywell Sensing and Productivity Solutions
Description: MLH ALL METAL PRESS SENSE -ATF
In stock: 896 pcs
RFQ

Copyright © 2020 Reliable Distributor of Electronic Components

E-mail: Info@infinity-electronic.com
Address: 17F, Gaylord Commercial Building, 114-118 Lockhart Road, Wan Chai, Hong Kong