Honeywell | Honeywell Sensing and Productivity Solutions

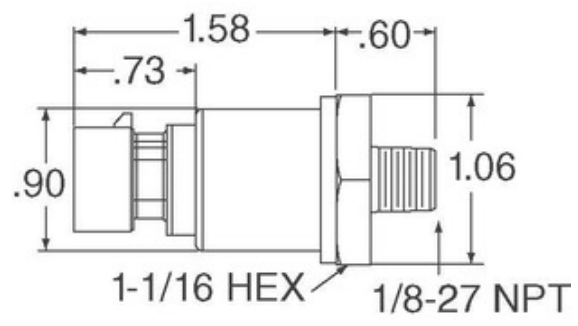

Image may be representation. See specifications for product details.

MLH200PGB06A

Part Number:	MLH200PGB06A
Manufacturer/Brand:	Honeywell Sensing and Productivity Solutions
Product description	MLH ALL METAL PRESS SENSE -ATF
Datasheets:	1.MLH200PGB06A.pdf 2.MLH200PGB06A.pdf
RoHs Status	Lead free / RoHS Compliant
Stock Condition	5640 pcs stock
Ship From	Hong Kong
Shipment Way	DHL/Fedex/TNT/UPS/EMS

REQUEST FOR QUOTATION

Specifications of MLH200PGB06A

PART NUMBER	MLH200PGB06A
MANUFACTURER	Honeywell Sensing and Productivity Solutions
DESCRIPTION	MLH ALL METAL PRESS SENSE -ATF
LEAD FREE STATUS / ROHS STATUS	Lead free / RoHS Compliant
QUANTITY AVAILABLE	5640 pcs
DATA SHEET	1.MLH200PGB06A.pdf 2.MLH200PGB06A.pdf
VOLTAGE - SUPPLY	5 V ~ 6 V
SUPPLIER DEVICE PACKAGE	-
SERIES	MLH
PRESSURE TYPE	Vented Gauge
PORT STYLE	Threaded
PORT SIZE	Male - 1/8" (3.18mm) NPT
PACKAGE / CASE	Cylinder, Metal
OUTPUT TYPE	Analog Voltage
OUTPUT	0.5 V ~ 4.5 V
OPERATING TEMPERATURE	-40°C ~ 125°C
OPERATING PRESSURE	200 PSI (1378.95 kPa)
MOISTURE SENSITIVITY LEVEL (MSL)	1 (Unlimited)
MAXIMUM PRESSURE	600 PSI (4136.85 kPa)
LEAD FREE STATUS / ROHS STATUS	Lead free / RoHS Compliant
FEATURES	Amplified Output, Temperature Compensated
DETAILED DESCRIPTION	Pressure Sensor 200 PSI (1378.95 kPa) Vented Gauge Male - 1/8" (3.18mm) NPT 0.5 V ~ 4.5 V Cylinder, Metal
ACCURACY	±0.25%

Related Tags

Honeywell Sensing and Productivity Solutions MLH200PGB06A	MLH200PGB06A Distributor	MLH200PGB06A Supplier
MLH200PGB06A Price	MLH200PGB06A Pictures	MLH200PGB06A Image
MLH200PGB06A PDF Datasheet	MLH200PGB06A Download Datasheet	MLH200PGB06A Datasheet
MLH200PGB06A Stock	Buy MLH200PGB06A	Buy Honeywell Sensing and Productivity Solutions MLH200PGB06A
Honeywell Sensing and Productivity Solutions MLH200PGB06A	Honeywell Sensing and Productivity Solutions Supplier	Honeywell Sensing and Productivity Solutions Distributor
Honeywell Sensing and Productivity Solutions MLH200PGB06A	HONEYWELL MLH200PGB06A	Honeywell Sensing and Control EMEA MLH200PGB06A
Honeywell Sensing and Productivity Solutions T&M MLH200PGB06A		

Related Products

MLH160BSD14B
Manufacturers: Honeywell Sensing and Productivity Solutions
Description: SENSOR SEALED GAUGE 0-160 BAR
In stock: 1141 pcs
RFQ

MLH200PSB01B
Manufacturers: Honeywell Sensing and Productivity Solutions
Description: SENSOR SEALED GAUGE 0-200 PSI
In stock: 1111 pcs
RFQ

MLH200PGL06B
Manufacturers: Honeywell Sensing and Productivity Solutions
Description: MLH ALL METAL PRESS SENSE -ATF
In stock: 6480 pcs
RFQ

MLH200PGL01A
Manufacturers: Honeywell Sensing and Productivity Solutions
Description: MLH ALL METAL PRESS SENSE -ATF
In stock: 1073 pcs
RFQ

MLH200PGB01B
Manufacturers: Honeywell Sensing and Productivity Solutions
Description: SENSOR AMP 200PSI 4-20MA OUT
In stock: 847 pcs
RFQ

MLH200PGB01A
Manufacturers: Honeywell Sensing and Productivity Solutions
Description: MLH ALL METAL PRESS SENSE -ATF
In stock: 1094 pcs
RFQ

MLH150PSL01B
Manufacturers: Honeywell Sensing and Productivity Solutions
Description: SENSOR SEALED GAUGE 0-150 PSI
In stock: 850 pcs
RFQ

MLH160BSH08A
Manufacturers: Honeywell Sensing and Productivity Solutions
Description: MLH ALL METAL PRESS SENSE -ATF
In stock: 994 pcs
RFQ

MLH200BSG14D
Manufacturers: Honeywell Sensing and Productivity Solutions
Description: MLH ALL METAL PRESS SENSE -ATF
In stock: 885 pcs
RFQ

MLH200PGM09B
Manufacturers: Honeywell Sensing and Productivity Solutions
Description: SENSOR GAUGE 0-200 PSI
In stock: 2869 pcs
RFQ

MLH200PGT06B
Manufacturers: Honeywell Sensing and Productivity Solutions
Description: MLH ALL METAL PRESS SENSE -ATF
In stock: 6364 pcs
RFQ

MLH200PGL01B
Manufacturers: Honeywell Sensing and Productivity Solutions
Description: SENSOR AMP 200PSI 4-20MA OUT
In stock: 875 pcs
RFQ

Copyright © 2020 Reliable Distributor of Electronic Components

E-mail: Info@infinity-electronic.com
Address: 17F, Gaylord Commercial Building, 114-118 Lockhart Road, Wan Chai, Hong Kong