Honeywell | Honeywell Sensing and Productivity Solutions

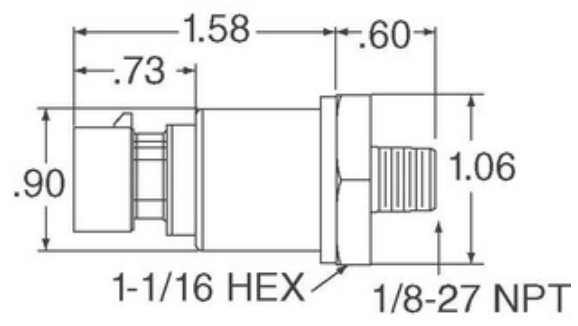

Image may be representation. See specifications for product details.

MLH060PGP06C

Part Number:	MLH060PGP06C
Manufacturer/Brand:	Honeywell Sensing and Productivity Solutions
Product description	SENSOR GAUGE 0-60 PSI
Datasheets:	1.MLH060PGP06C.pdf 2.MLH060PGP06C.pdf
RoHs Status	Lead free / RoHS Compliant
Stock Condition	3531 pcs stock
Ship From	Hong Kong
Shipment Way	DHL/Fedex/TNT/UPS/EMS

REQUEST FOR QUOTATION

Specifications of MLH060PGP06C

PART NUMBER	MLH060PGP06C
MANUFACTURER	Honeywell Sensing and Productivity Solutions
DESCRIPTION	SENSOR GAUGE 0-60 PSI
LEAD FREE STATUS / ROHS STATUS	Lead free / RoHS Compliant
QUANTITY AVAILABLE	3531 pcs
DATA SHEET	1.MLH060PGP06C.pdf 2.MLH060PGP06C.pdf
VOLTAGE - SUPPLY	8 V ~ 30 V
TERMINATION STYLE	Flying Lead
SUPPLIER DEVICE PACKAGE	-
SERIES	MLH
PRESSURE TYPE	Vented Gauge
PORT STYLE	Threaded
PORT SIZE	Male - 1/8" (3.18mm) NPT
PACKAGE / CASE	Cylinder, Metal
OUTPUT TYPE	Analog Voltage
OUTPUT	1 V ~ 6 V
OPERATING TEMPERATURE	-40°C ~ 125°C
OPERATING PRESSURE	60 PSI (413.69 kPa)
MOISTURE SENSITIVITY LEVEL (MSL)	1 (Unlimited)
MAXIMUM PRESSURE	1740.45 PSI (12000 kPa)
LEAD FREE STATUS / ROHS STATUS	Lead free / RoHS Compliant
FEATURES	Amplified Output, Temperature Compensated
DETAILED DESCRIPTION	Pressure Sensor 60 PSI (413.69 kPa) Vented Gauge Male - 1/8" (3.18mm) NPT 1 V ~ 6 V Cylinder, Metal
ACCURACY	±0.25%

Related Tags

Honeywell Sensing and Productivity Solutions MLH060PGP06C	MLH060PGP06C Distributor	MLH060PGP06C Supplier
MLH060PGP06C Price	MLH060PGP06C Pictures	MLH060PGP06C Image
MLH060PGP06C PDF Datasheet	MLH060PGP06C Download Datasheet	MLH060PGP06C Datasheet
MLH060PGP06C Stock	Buy MLH060PGP06C	Buy Honeywell Sensing and Productivity Solutions MLH060PGP06C
Honeywell Sensing and Productivity Solutions MLH060PGP06C	Honeywell Sensing and Productivity Solutions Supplier	Honeywell Sensing and Productivity Solutions Distributor
Honeywell Sensing and Productivity Solutions MLH060PGP06C	HONEYWELL MLH060PGP06C	Honeywell Sensing and Control EMEA MLH060PGP06C
Honeywell Sensing and Productivity Solutions T&M MLH060PGP06C		

Related Products

MLH060BSB01B
Manufacturers: Honeywell Sensing and Productivity Solutions
Description: SENSOR SEALED GAUGE 0-60 BAR
In stock: 1179 pcs
RFQ

MLH08KPSB01B
Manufacturers: Honeywell Sensing and Productivity Solutions
Description: SENSOR AMP 8000PSI 4-20MA OUT
In stock: 4752 pcs
RFQ

MLH05KPST10A
Manufacturers: Honeywell Sensing and Productivity Solutions
Description: MLH ALL METAL PRESS SENSE -ATF
In stock: 896 pcs
RFQ

MLH08KPSB01A
Manufacturers: Honeywell Sensing and Productivity Solutions
Description: SENSOR AMP 8000PSI .5-4.5VDC OUT
In stock: 863 pcs
RFQ

MLH060BGB01B
Manufacturers: Honeywell Sensing and Productivity Solutions
Description: SENSOR GAUGE 0-60 BAR
In stock: 4960 pcs
RFQ

MLH06KPSB10A
Manufacturers: Honeywell Sensing and Productivity Solutions
Description: SENSOR SEALED GAUGE 0-6000 PSI
In stock: 6107 pcs
RFQ

MLH060BSB09A
Manufacturers: Honeywell Sensing and Productivity Solutions
Description: SENSOR SEALED GAUGE 0-60 BAR
In stock: 4911 pcs
RFQ

MLH060BSD14B
Manufacturers: Honeywell Sensing and Productivity Solutions
Description: SENSOR SEALED GAUGE 0-60 BAR
In stock: 4763 pcs
RFQ

MLH05KPST10G
Manufacturers: Honeywell Sensing and Productivity Solutions
Description: MLH ALL METAL PRESS SENSE -ATF
In stock: 801 pcs
RFQ

MLH07KPSB01D
Manufacturers: Honeywell Sensing and Productivity Solutions
Description: SENSOR SEALED GAUGE 0-7000 PSI
In stock: 825 pcs
RFQ

MLH06KPST12E
Manufacturers: Honeywell Sensing and Productivity Solutions
Description: MLH ALL METAL PRESS SENSE -ATF
In stock: 905 pcs
RFQ

MLH08KPSH03A
Manufacturers: Honeywell Sensing and Productivity Solutions
Description: MLH ALL METAL PRESS SENSE -ATF
In stock: 1073 pcs
RFQ

Copyright © 2020 Reliable Distributor of Electronic Components
E-mail: Info@infinity-electronic.com
Address: 17F, Gaylord Commercial Building, 114-118 Lockhart Road, Wan Chai, Hong Kong