Honeywell | Honeywell Sensing and Productivity Solutions

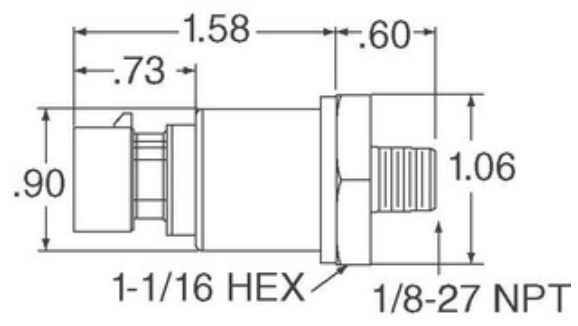

Image may be representation. See specifications for product details.

MLH100PGD14B

Part Number:	MLH100PGD14B
Manufacturer/Brand:	Honeywell Sensing and Productivity Solutions
Product description	MLH ALL METAL PRESS SENSE -ATF
Datasheets:	1.MLH100PGD14B.pdf 2.MLH100PGD14B.pdf
RoHs Status	Lead free / RoHS Compliant
Stock Condition	1205 pcs stock
Ship From	Hong Kong
Shipment Way	DHL/Fedex/TNT/UPS/EMS

REQUEST FOR QUOTATION

Specifications of MLH100PGD14B

PART NUMBER	MLH100PGD14B
MANUFACTURER	Honeywell Sensing and Productivity Solutions
DESCRIPTION	MLH ALL METAL PRESS SENSE -ATF
LEAD FREE STATUS / ROHS STATUS	Lead free / RoHS Compliant
QUANTITY AVAILABLE	1205 pcs
DATA SHEET	1.MLH100PGD14B.pdf 2.MLH100PGD14B.pdf
VOLTAGE - SUPPLY	9.5 V ~ 30 V
SUPPLIER DEVICE PACKAGE	-
SERIES	MLH
PRESSURE TYPE	Vented Gauge
PORT STYLE	Threaded
PORT SIZE	Male - 1/4" (6.35mm) BSP
PACKAGE / CASE	Cylinder, Metal
OUTPUT TYPE	Analog Current
OUTPUT	4 mA ~ 20 mA
OPERATING TEMPERATURE	-40°C ~ 125°C
OPERATING PRESSURE	100 PSI (689.48 kPa)
MOISTURE SENSITIVITY LEVEL (MSL)	1 (Unlimited)
MAXIMUM PRESSURE	300 PSI (2068.43 kPa)
LEAD FREE STATUS / ROHS STATUS	Lead free / RoHS Compliant
FEATURES	Amplified Output, Temperature Compensated
DETAILED DESCRIPTION	Pressure Sensor 100 PSI (689.48 kPa) Vented Gauge Male - 1/4" (6.35mm) BSP 4 mA ~ 20 mA Cylinder, Metal
ACCURACY	±0.25%

Related Tags

- Honeywell Sensing and Productivity Solutions MLH100PGD14B
- MLH100PGD14B Distributor
- MLH100PGD14B Supplier
- MLH100PGD14B Price
- MLH100PGD14B Pictures
- MLH100PGD14B Image
- MLH100PGD14B PDF Datasheet
- MLH100PGD14B Download Datasheet
- MLH100PGD14B Datasheet
- MLH100PGD14B Stock
- Buy MLH100PGD14B
- Buy Honeywell Sensing and Productivity Solutions MLH100PGD14B
- Honeywell Sensing and Productivity Solutions MLH100PGD14B
- Honeywell Sensing and Productivity Solutions Supplier
- Honeywell Sensing and Productivity Solutions Distributor
- Honeywell Sensing and Productivity Solutions MLH100PGD14B
- HONEYWELL MLH100PGD14B
- Honeywell Sensing and Control EMEA MLH100PGD14B
- Honeywell Sensing and Productivity Solutions T&M MLH100PGD14B

Related Products

MLH100PGL01B
Manufacturers: Honeywell Sensing and Productivity Solutions
Description: SENSOR AMP 100PSI 4-20MA OUT
In stock: 827 pcs
RFQ

MLH100PGL06B
Manufacturers: Honeywell Sensing and Productivity Solutions
Description: SENSOR AMP 100PSI 4-20MA OUT
In stock: 859 pcs
RFQ

MLH100PGL06C
Manufacturers: Honeywell Sensing and Productivity Solutions
Description: SENSOR AMP 100PSI 1-6VDC OUT
In stock: 683 pcs
RFQ

MLH100PGB10A
Manufacturers: Honeywell Sensing and Productivity Solutions
Description: SENSOR AMP 100PSI .5-4.5VDC OUT
In stock: 1096 pcs
RFQ

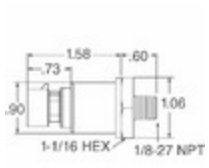

MLH100PGB06C
Manufacturers: Honeywell Sensing and Productivity Solutions
Description: MLH ALL METAL PRESS SENSE -ATF
In stock: 894 pcs
RFQ

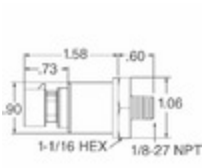

MLH100PGD01C
Manufacturers: Honeywell Sensing and Productivity Solutions
Description: MLH ALL METAL PRESS SENSE -ATF
In stock: 3130 pcs
RFQ

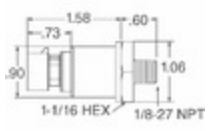

MLH100PGB06E
Manufacturers: Honeywell Sensing and Productivity Solutions
Description: MLH ALL METAL PRESS SENSE -ATF
In stock: 1020 pcs
RFQ

MLH100PGL06A
Manufacturers: Honeywell Sensing and Productivity Solutions
Description: SENSOR AMP 100PSI .5-4.5VDC OUT
In stock: 648 pcs
RFQ

MLH100PGB06B
Manufacturers: Honeywell Sensing and Productivity Solutions
Description: SENSOR AMP 100PSI 4-20MA OUT
In stock: 4489 pcs
RFQ

MLH100PGL01G
Manufacturers: Honeywell Sensing and Productivity Solutions
Description: SENSOR AMP 100PSI 1-5VDC OUT
In stock: 690 pcs
RFQ

MLH100PGB06A
Manufacturers: Honeywell Sensing and Productivity Solutions
Description: SENSOR AMP 100PSI .5-4.5VDC OUT
In stock: 747 pcs
RFQ

MLH100PGL01A
Manufacturers: Honeywell Sensing and Productivity Solutions
Description: SENSOR AMP 100PSI .5-4.5VDC OUT
In stock: 801 pcs
RFQ

Copyright © 2020 Reliable Distributor of Electronic Components

E-mail: Info@infinity-electronic.com
Address: 17F, Gaylord Commercial Building, 114-118 Lockhart Road, Wan Chai, Hong Kong