Honeywell | Honeywell Sensing and Productivity Solutions

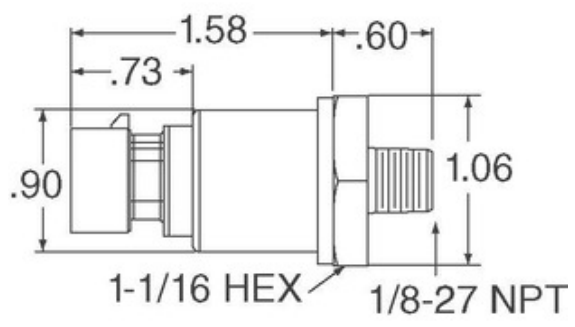

Image may be representation. See specifications for product details.

MLH010BSB06E

Part Number:	MLH010BSB06E
Manufacturer/Brand:	Honeywell Sensing and Productivity Solutions
Product description	SENSOR GAUGE 0-10 BAR
Datasheets:	1.MLH010BSB06E.pdf 2.MLH010BSB06E.pdf
RoHs Status	Lead free / RoHS Compliant
Stock Condition	799 pcs stock
Ship From	Hong Kong
Shipment Way	DHL/Fedex/TNT/UPS/EMS

REQUEST FOR QUOTATION

Specifications of MLH010BSB06E

PART NUMBER	MLH010BSB06E
MANUFACTURER	Honeywell Sensing and Productivity Solutions
DESCRIPTION	SENSOR GAUGE 0-10 BAR
LEAD FREE STATUS / ROHS STATUS	Lead free / RoHS Compliant
QUANTITY AVAILABLE	799 pcs
DATA SHEET	1.MLH010BSB06E.pdf 2.MLH010BSB06E.pdf
VOLTAGE - SUPPLY	7 V ~ 30 V
TERMINATION STYLE	Packard Metripak 150
SUPPLIER DEVICE PACKAGE	-
SERIES	MLH
PRESSURE TYPE	Sealed Gauge
PORT STYLE	Threaded
PORT SIZE	Male - 1/8" (3.18mm) NPT
PACKAGE / CASE	Cylinder, Metal
OUTPUT TYPE	Analog Voltage
OUTPUT	0.5 V ~ 4.5 V
OPERATING TEMPERATURE	-40°C ~ 125°C
OPERATING PRESSURE	145.04 PSI (1000 kPa)
MOISTURE SENSITIVITY LEVEL (MSL)	1 (Unlimited)
MAXIMUM PRESSURE	435.11 PSI (3000 kPa)
LEAD FREE STATUS / ROHS STATUS	Lead free / RoHS Compliant
FEATURES	Amplified Output, Temperature Compensated
DETAILED DESCRIPTION	Pressure Sensor 145.04 PSI (1000 kPa) Sealed Gauge Male - 1/8" (3.18mm) NPT 0.5 V ~ 4.5 V Cylinder, Metal
ACCURACY	±0.25%

Related Tags

Honeywell Sensing and Productivity Solutions MLH010BSB06E	MLH010BSB06E Distributor	MLH010BSB06E Supplier
MLH010BSB06E Price	MLH010BSB06E Pictures	MLH010BSB06E Image
MLH010BSB06E PDF Datasheet	MLH010BSB06E Download Datasheet	MLH010BSB06E Datasheet
MLH010BSB06E Stock	Buy MLH010BSB06E	Buy Honeywell Sensing and Productivity Solutions MLH010BSB06E
Honeywell Sensing and Productivity Solutions MLH010BSB06E	Honeywell Sensing and Productivity Solutions Supplier	Honeywell Sensing and Productivity Solutions Distributor
Honeywell Sensing and Productivity Solutions MLH010BSB06E	HONEYWELL MLH010BSB06E	Honeywell Sensing and Control EMEA MLH010BSB06E
Honeywell Sensing and Productivity Solutions T&M MLH010BSB06E		

Related Products

MLH010BSG17B
Manufacturers: Honeywell Sensing and Productivity Solutions
Description: TRANS MLH010 BAR S 43650-C G1
In stock: 850 pcs
RFQ

MLH010BSB01B
Manufacturers: Honeywell Sensing and Productivity Solutions
Description: SENSOR GAUGE 0-10 BAR
In stock: 6851 pcs
RFQ

MLH010BSG19B
Manufacturers: Honeywell Sensing and Productivity Solutions
Description: TRANS MLH010 BAR S 43650-C PT1
In stock: 4757 pcs
RFQ

MLH010BSG01B
Manufacturers: Honeywell Sensing and Productivity Solutions
Description: SENSOR GAUGE 0-10 BAR
In stock: 3678 pcs
RFQ

MLH010BGM06B
Manufacturers: Honeywell Sensing and Productivity Solutions
Description: MLH ALL METAL PRESS SENSE -ATF
In stock: 3530 pcs
RFQ

MLH010BGG20B
Manufacturers: Honeywell Sensing and Productivity Solutions
Description: MLH ALL METAL PRESS SENSE -ATF
In stock: 1026 pcs
RFQ

MLH010BGP01B
Manufacturers: Honeywell Sensing and Productivity Solutions
Description: MLH ALL METAL PRESS SENSE -ATF
In stock: 3650 pcs
RFQ

MLH010BSH08A
Manufacturers: Honeywell Sensing and Productivity Solutions
Description: SENSOR SEALED GAUGE 0-10 BAR
In stock: 4593 pcs
RFQ

MLH010BSL01A
Manufacturers: Honeywell Sensing and Productivity Solutions
Description: MLH ALL METAL PRESS SENSE -ATF
In stock: 6915 pcs
RFQ

MLH010BGL14B
Manufacturers: Honeywell Sensing and Productivity Solutions
Description: SENSOR GAUGE 0-10 BAR
In stock: 990 pcs
RFQ

MLH010BGT14A
Manufacturers: Honeywell Sensing and Productivity Solutions
Description: SENSOR GAUGE 0-10 BAR
In stock: 1199 pcs
RFQ

MLH010BSC17G
Manufacturers: Honeywell Sensing and Productivity Solutions
Description: MLH ALL METAL PRESS SENSE -ATF
In stock: 764 pcs
RFQ

Copyright © 2020 Reliable Distributor of Electronic Components

E-mail: Info@infinity-electronic.com
Address: 17F, Gaylord Commercial Building, 114-118 Lockhart Road, Wan Chai, Hong Kong