Honeywell | Honeywell Sensing and Productivity Solutions

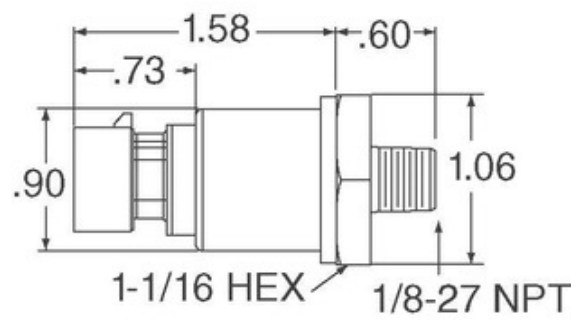

Image may be representation. See specifications for product details.

MLH060BSB09A

Part Number:	MLH060BSB09A
Manufacturer/Brand:	Honeywell Sensing and Productivity Solutions
Product description	SENSOR SEALED GAUGE 0-60 BAR
Datasheets:	1.MLH060BSB09A.pdf 2.MLH060BSB09A.pdf
RoHs Status	Lead free / RoHS Compliant
Stock Condition	4911 pcs stock
Ship From	Hong Kong
Shipment Way	DHL/Fedex/TNT/UPS/EMS

REQUEST FOR QUOTATION

Specifications of MLH060BSB09A

PART NUMBER	MLH060BSB09A
MANUFACTURER	Honeywell Sensing and Productivity Solutions
DESCRIPTION	SENSOR SEALED GAUGE 0-60 BAR
LEAD FREE STATUS / ROHS STATUS	Lead free / RoHS Compliant
QUANTITY AVAILABLE	4911 pcs
DATA SHEET	1.MLH060BSB09A.pdf 2.MLH060BSB09A.pdf
VOLTAGE - SUPPLY	5 V ~ 6 V
TERMINATION STYLE	Packard Metripak 150
SUPPLIER DEVICE PACKAGE	-
SERIES	MLH
PRESSURE TYPE	Sealed Gauge
PORT STYLE	Threaded
PORT SIZE	Female - 7/16" (11.11mm) UNF Schrader
PACKAGE / CASE	Cylinder, Metal
OUTPUT TYPE	Analog Voltage
OUTPUT	0.5 V ~ 4.5 V
OPERATING TEMPERATURE	-40°C ~ 125°C
OPERATING PRESSURE	870.23 PSI (6000 kPa)
MOISTURE SENSITIVITY LEVEL (MSL)	1 (Unlimited)
MAXIMUM PRESSURE	1740.45 PSI (12000 kPa)
LEAD FREE STATUS / ROHS STATUS	Lead free / RoHS Compliant
FEATURES	Amplified Output, Temperature Compensated
DETAILED DESCRIPTION	Pressure Sensor 870.23 PSI (6000 kPa) Sealed Gauge Female - 7/16" (11.11mm) UNF Schrader 0.5 V ~ 4.5 V Cylinder, Metal
ACCURACY	±0.25%

Related Tags

Honeywell Sensing and Productivity Solutions MLH060BSB09A	MLH060BSB09A Distributor	MLH060BSB09A Supplier
MLH060BSB09A Price	MLH060BSB09A Pictures	MLH060BSB09A Image
MLH060BSB09A PDF Datasheet	MLH060BSB09A Download Datasheet	MLH060BSB09A Datasheet
MLH060BSB09A Stock	Buy MLH060BSB09A	Buy Honeywell Sensing and Productivity Solutions MLH060BSB09A
Honeywell Sensing and Productivity Solutions MLH060BSB09A	Honeywell Sensing and Productivity Solutions Supplier	Honeywell Sensing and Productivity Solutions Distributor
Honeywell Sensing and Productivity Solutions MLH060BSB09A	HONEYWELL MLH060BSB09A	Honeywell Sensing and Control EMEA MLH060BSB09A
Honeywell Sensing and Productivity Solutions T&M MLH060BSB09A		

Related Products

MLH06KPSB10A
Manufacturers: Honeywell Sensing and Productivity Solutions
Description: SENSOR SEALED GAUGE 0-6000 PSI
In stock: 6107 pcs
RFQ

MLH05KPST10G
Manufacturers: Honeywell Sensing and Productivity Solutions
Description: MLH ALL METAL PRESS SENSE -ATF
In stock: 801 pcs
RFQ

MLH060BGB01B
Manufacturers: Honeywell Sensing and Productivity Solutions
Description: SENSOR GAUGE 0-60 BAR
In stock: 4960 pcs
RFQ

MLH06KPST12E
Manufacturers: Honeywell Sensing and Productivity Solutions
Description: MLH ALL METAL PRESS SENSE -ATF
In stock: 905 pcs
RFQ

MLH05KPSP06C
Manufacturers: Honeywell Sensing and Productivity Solutions
Description: SENSOR AMP 5000PSI 1-6VDC OUT
In stock: 622 pcs
RFQ

MLH05KPST10A
Manufacturers: Honeywell Sensing and Productivity Solutions
Description: MLH ALL METAL PRESS SENSE -ATF
In stock: 896 pcs
RFQ

MLH05KPST04A
Manufacturers: Honeywell Sensing and Productivity Solutions
Description: SENSOR SEALED GAUGE 0-5000 PSI
In stock: 853 pcs
RFQ

MLH07KPSB01D
Manufacturers: Honeywell Sensing and Productivity Solutions
Description: SENSOR SEALED GAUGE 0-7000 PSI
In stock: 825 pcs
RFQ

MLH060BSD14B
Manufacturers: Honeywell Sensing and Productivity Solutions
Description: SENSOR SEALED GAUGE 0-60 BAR
In stock: 4763 pcs
RFQ

MLH060PGP06C
Manufacturers: Honeywell Sensing and Productivity Solutions
Description: SENSOR GAUGE 0-60 PSI
In stock: 3531 pcs
RFQ

MLH08KPSB01A
Manufacturers: Honeywell Sensing and Productivity Solutions
Description: SENSOR AMP 8000PSI .5-4.5VDC OUT
In stock: 863 pcs
RFQ

MLH060BSB01B
Manufacturers: Honeywell Sensing and Productivity Solutions
Description: SENSOR SEALED GAUGE 0-60 BAR
In stock: 1179 pcs
RFQ

Copyright © 2020 Reliable Distributor of Electronic Components

E-mail: Info@infinity-electronic.com
Address: 17F, Gaylord Commercial Building, 114-118 Lockhart Road, Wan Chai, Hong Kong