Panasonic | Panasonic

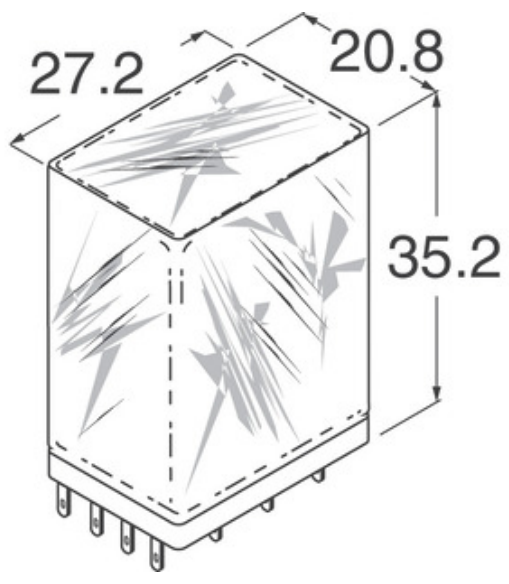

Image may be representation. See specifications for product details.

HC2E-H-AC48V-F

Part Number:	HC2E-H-AC48V-F
Manufacturer/Brand:	Panasonic
Product description	HC RELAY 2 FORM C 48VAC
Datasheets:	HC2E-H-AC48V-F.pdf
RoHs Status	Lead free / RoHS Compliant
Stock Condition	6316 pcs stock
Ship From	Hong Kong
Shipment Way	DHL/Fedex/TNT/UPS/EMS

REQUEST FOR QUOTATION

Specifications of HC2E-H-AC48V-F

PART NUMBER	HC2E-H-AC48V-F
MANUFACTURER	Panasonic
DESCRIPTION	HC RELAY 2 FORM C 48VAC
LEAD FREE STATUS / ROHS STATUS	Lead free / RoHS Compliant
QUANTITY AVAILABLE	6316 pcs
DATA SHEET	HC2E-H-AC48V-F.pdf
SERIES	*
MOISTURE SENSITIVITY LEVEL (MSL)	1 (Unlimited)
LEAD FREE STATUS / ROHS STATUS	Lead free / RoHS Compliant
DETAILED DESCRIPTION	Relay Coil

Related Tags

Panasonic HC2E-H-AC48V-F	HC2E-H-AC48V-F Distributor	HC2E-H-AC48V-F Supplier
HC2E-H-AC48V-F Price	HC2E-H-AC48V-F Pictures	HC2E-H-AC48V-F Image
HC2E-H-AC48V-F PDF Datasheet	HC2E-H-AC48V-F Download Datasheet	HC2E-H-AC48V-F Datasheet
HC2E-H-AC48V-F Stock	Buy HC2E-H-AC48V-F	Buy Panasonic HC2E-H-AC48V-F
Panasonic HC2E-H-AC48V-F	Panasonic Supplier	Panasonic Distributor
Panasonic HC2E-H-AC48V-F	Panasonic - Consumer Division HC2E-H-AC48V-F	Panasonic - Consumer Electronics Corp. HC2E-H-AC48V-F
Panasonic Battery Group HC2E-H-AC48V-F	Panasonic Electric Works - ACSD HC2E-H-AC48V-F	Panasonic Electronic Components - Semiconductor Pr HC2E-H-AC48V-F
Panasonic - ATG HC2E-H-AC48V-F	Panasonic - BSG HC2E-H-AC48V-F	Panasonic - DTG HC2E-H-AC48V-F
Panasonic Electric Works HC2E-H-AC48V-F	Panasonic Electronic Components HC2E-H-AC48V-F	Panasonic Industrial Automation Sales HC2E-H-AC48V-F
Panasonic Semiconductor HC2E-H-AC48V-F		

Related Products

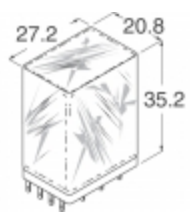

HC2E-H-AC24V-F
Manufacturers: Panasonic
Description: HC RELAY 2 FORM C 24VAC
In stock: 6725 pcs
RFQ

HC2E-H-DC110V-F
Manufacturers: Panasonic
Description: HC RELAY
In stock: 9637 pcs
RFQ

HC2E-H-DC100V-F
Manufacturers: Panasonic
Description: RELAY GEN PURP DPDT 100VDC
In stock: 4132 pcs
RFQ

HC2E-H-AC48V
Manufacturers: Panasonic
Description: RELAY GEN PURPOSE DPDT 3A 48V
In stock: 4261 pcs
RFQ

HC2E-H-AC6V
Manufacturers: Panasonic
Description: RELAY GENERAL PURPOSE DPDT 3A 6V
In stock: 3525 pcs
RFQ

HC2E-H-AC200V-F
Manufacturers: Panasonic
Description: RELAY GEN PURP DPDT 200VAC
In stock: 4515 pcs
RFQ

HC2E-H-DC110V
Manufacturers: Panasonic
Description: RELAY GEN PURPOSE DPDT 3A 110V
In stock: 5186 pcs
RFQ

HC2E-H-AC24V
Manufacturers: Panasonic
Description: RELAY GEN PURPOSE DPDT 3A 24V
In stock: 2726 pcs
RFQ

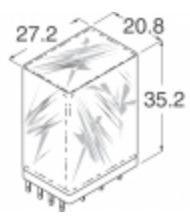

HC2E-H-AC6V-F
Manufacturers: Panasonic
Description: HC RELAY 2 FORM C 6VAC
In stock: 7765 pcs
RFQ

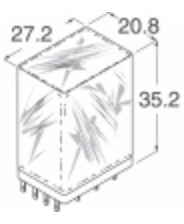

HC2E-H-AC240V-F
Manufacturers: Panasonic
Description: HC RELAY 2 FORM C 240VAC
In stock: 7594 pcs
RFQ

HC2E-H-DC12V
Manufacturers: Panasonic
Description: RELAY GEN PURPOSE DPDT 3A 12V
In stock: 6950 pcs
RFQ

HC2E-H-AC240V
Manufacturers: Panasonic
Description: RELAY GEN PURPOSE DPDT 3A 240V
In stock: 3021 pcs
RFQ

Copyright © 2020 Reliable Distributor of Electronic Components

E-mail: Info@infinity-electronic.com
Address: 17F, Gaylord Commercial Building, 114-118 Lockhart Road, Wan Chai, Hong Kong