Honeywell | Honeywell Sensing and Productivity Solutions

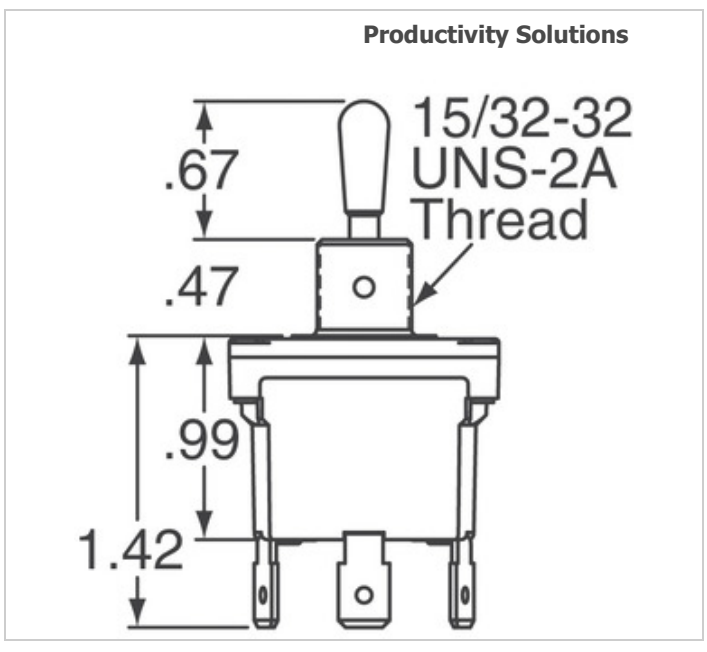

Image may be representation. See specifications for product details.

32NT91-5

Part Number:	32NT91-5
Manufacturer/Brand:	Honeywell Sensing and Productivity Solutions
Product description	SWITCH TOGGLE DPDT 10A 125V
Datasheets:	1.32NT91-5.pdf 2.32NT91-5.pdf 3.32NT91-5.pdf
RoHs Status	Lead free / RoHS Compliant
Stock Condition	4380 pcs stock
Ship From	Hong Kong
Shipment Way	DHL/Fedex/TNT/UPS/EMS

REQUEST FOR QUOTATION

Specifications of 32NT91-5

PART NUMBER	32NT91-5
MANUFACTURER	Honeywell Sensing and Productivity Solutions
DESCRIPTION	SWITCH TOGGLE DPDT 10A 125V
LEAD FREE STATUS / ROHS STATUS	Lead free / RoHS Compliant
QUANTITY AVAILABLE	4380 pcs
DATA SHEET	1.32NT91-5.pdf 2.32NT91-5.pdf 3.32NT91-5.pdf
VOLTAGE RATING - AC	125V
TERMINATION STYLE	Quick Connect - 0.250" (6.3mm)
SWITCH FUNCTION	On-Off-Mom
SERIES	NT
PANEL CUTOUT DIMENSIONS	Circular - 12.40mm Dia
PACKAGING	Bulk
OPERATING TEMPERATURE	-40°C ~ 71°C
MOUNTING TYPE	Panel Mount
MOISTURE SENSITIVITY LEVEL (MSL)	1 (Unlimited)
LEAD FREE STATUS / ROHS STATUS	Lead free / RoHS Compliant
INGRESS PROTECTION	IP67/68 - Dust Tight, Waterproof
ILLUMINATION VOLTAGE (NOMINAL)	-
ILLUMINATION TYPE, COLOR	-
ILLUMINATION	Non-Illuminated
FEATURES	Sealed
ELECTRICAL LIFE	-
DETAILED DESCRIPTION	Toggle Switch DPDT Panel Mount
CURRENT RATING	10A (AC)
CIRCUIT	DPDT
BUSHING THREAD	15/32-32
ACTUATOR TYPE	Standard Round
ACTUATOR MATERIAL	-
ACTUATOR LENGTH	17.02mm

Related Tags

Honeywell Sensing and Productivity Solutions 32NT91-5	32NT91-5 Distributor	32NT91-5 Supplier
32NT91-5 Price	32NT91-5 Pictures	32NT91-5 Image
32NT91-5 PDF Datasheet	32NT91-5 Download Datasheet	32NT91-5 Datasheet
32NT91-5 Stock	Buy 32NT91-5	Buy Honeywell Sensing and Productivity Solutions 32NT91-5
Honeywell Sensing and Productivity Solutions 32NT91-5	Honeywell Sensing and Productivity Solutions Supplier	Honeywell Sensing and Productivity Solutions Distributor
Honeywell Sensing and Productivity Solutions 32NT91-5	HONEYWELL 32NT91-5	Honeywell Sensing and Control EMEA 32NT91-5
Honeywell Sensing and Productivity Solutions T&M 32NT91-5		

Related Products

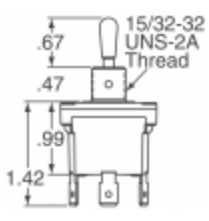

32NT91-7E
Manufacturers: Honeywell Sensing and Productivity Solutions
Description: SWITCH TOGGLE DPDT 10A 125V
In stock: 2403 pcs
RFQ

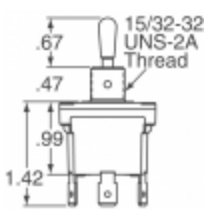

32NT91-21
Manufacturers: Honeywell Sensing and Productivity Solutions
Description: SWITCH TOGGLE DPST 15A 125V
In stock: 4670 pcs
RFQ

32NT91-70
Manufacturers: Honeywell Sensing and Productivity Solutions
Description: SWITCH TOGGLE DPDT 10A 125V
In stock: 3147 pcs
RFQ

32NT91-7
Manufacturers: Honeywell Sensing and Productivity Solutions
Description: SWITCH TOGGLE DPDT 10A 125V
In stock: 3430 pcs
RFQ

32NT91-6
Manufacturers: Honeywell Sensing and Productivity Solutions
Description: SWITCH TOGGLE DPST-NO 10A 125V
In stock: 3641 pcs
RFQ

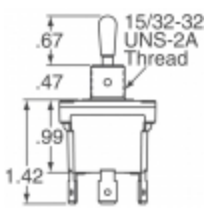

32NT91-4
Manufacturers: Honeywell Sensing and Productivity Solutions
Description: SWITCH TOGGLE DPST-NC 10A 125V
In stock: 4437 pcs
RFQ

32NT91-3
Manufacturers: Honeywell Sensing and Productivity Solutions
Description: SWITCH TOGGLE DPDT 15A 125V
In stock: 4816 pcs
RFQ

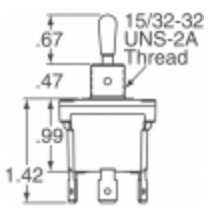

32NT91-227
Manufacturers: Honeywell Sensing and Productivity Solutions
Description: SWITCH TOGGLE DPDT 10A 125V
In stock: 3644 pcs
RFQ

32NT91-2
Manufacturers: Honeywell Sensing and Productivity Solutions
Description: SWITCH TOGGLE DPST 15A 125V
In stock: 3994 pcs
RFQ

32NT91-61
Manufacturers: Honeywell Sensing and Productivity Solutions
Description: SWITCH TOGGLE DPST-NO 10A 125V
In stock: 4459 pcs
RFQ

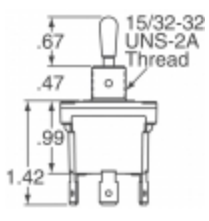

32NT91-31
Manufacturers: Honeywell Sensing and Productivity Solutions
Description: SWITCH TOGGLE DPDT 15A 125V
In stock: 4922 pcs
RFQ

32NT91-50
Manufacturers: Honeywell Sensing and Productivity Solutions
Description: SWITCH TOGGLE DPDT 10A 125V
In stock: 3300 pcs
RFQ

Copyright © 2020 Reliable Distributor of Electronic Components

E-mail: Info@infinity-electronic.com
Address: 17F, Gaylord Commercial Building, 114-118 Lockhart Road, Wan Chai, Hong Kong