Honeywell | Honeywell Sensing and Productivity Solutions

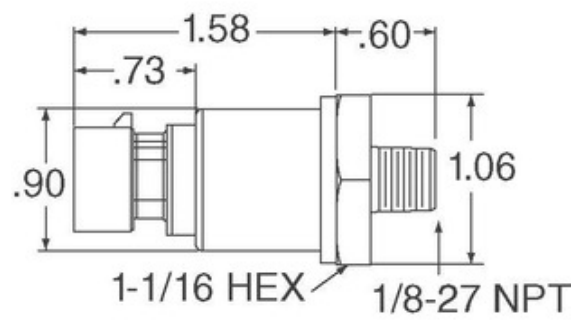

Image may be representation. See specifications for product details.

MLH025BGG20B

Part Number:	MLH025BGG20B
Manufacturer/Brand:	Honeywell Sensing and Productivity Solutions
Product description	MLH ALL METAL PRESS SENSE -ATF
Datasheets:	1.MLH025BGG20B.pdf 2.MLH025BGG20B.pdf
RoHs Status	Lead free / RoHS Compliant
Stock Condition	5780 pcs stock
Ship From	Hong Kong
Shipment Way	DHL/Fedex/TNT/UPS/EMS

REQUEST FOR QUOTATION

Specifications of MLH025BGG20B

PART NUMBER	MLH025BGG20B
MANUFACTURER	Honeywell Sensing and Productivity Solutions
DESCRIPTION	MLH ALL METAL PRESS SENSE -ATF
LEAD FREE STATUS / ROHS STATUS	Lead free / RoHS Compliant
QUANTITY AVAILABLE	5780 pcs
DATA SHEET	1.MLH025BGG20B.pdf 2.MLH025BGG20B.pdf
VOLTAGE - SUPPLY	9.5 V ~ 30 V
SUPPLIER DEVICE PACKAGE	-
SERIES	MLH
PRESSURE TYPE	Vented Gauge
PORT STYLE	Threaded
PORT SIZE	Male - M20 x 1.5
PACKAGE / CASE	Cylinder, Metal
OUTPUT TYPE	Analog Current
OUTPUT	4 mA ~ 20 mA
OPERATING TEMPERATURE	-40°C ~ 125°C
OPERATING PRESSURE	362.59 PSI (2500 kPa)
MOISTURE SENSITIVITY LEVEL (MSL)	1 (Unlimited)
MAXIMUM PRESSURE	1087.78 PSI (7500 kPa)
LEAD FREE STATUS / ROHS STATUS	Lead free / RoHS Compliant
FEATURES	Amplified Output, Temperature Compensated
DETAILED DESCRIPTION	Pressure Sensor 362.59 PSI (2500 kPa) Vented Gauge Male - M20 x 1.5 4 mA ~ 20 mA Cylinder, Metal
ACCURACY	±0.25%

Related Tags

Honeywell Sensing and Productivity Solutions MLH025BGG20B	MLH025BGG20B Distributor	MLH025BGG20B Supplier
MLH025BGG20B Price	MLH025BGG20B Pictures	MLH025BGG20B Image
MLH025BGG20B PDF Datasheet	MLH025BGG20B Download Datasheet	MLH025BGG20B Datasheet
MLH025BGG20B Stock	Buy MLH025BGG20B	Buy Honeywell Sensing and Productivity Solutions MLH025BGG20B
Honeywell Sensing and Productivity Solutions MLH025BGG20B	Honeywell Sensing and Productivity Solutions Supplier	Honeywell Sensing and Productivity Solutions Distributor
Honeywell Sensing and Productivity Solutions MLH025BGG20B	HONEYWELL MLH025BGG20B	Honeywell Sensing and Control EMEA MLH025BGG20B
Honeywell Sensing and Productivity Solutions T&M MLH025BGG20B		

Related Products

MLH025BSD14E
Manufacturers: Honeywell Sensing and Productivity Solutions
Description: SENSOR SEALED GAUGE 0-25 BAR
In stock: 3961 pcs
RFQ

MLH025BGB20B
Manufacturers: Honeywell Sensing and Productivity Solutions
Description: MLH ALL METAL PRESS SENSE -ATF
In stock: 860 pcs
RFQ

MLH025BGG02B
Manufacturers: Honeywell Sensing and Productivity Solutions
Description: MLH ALL METAL PRESS SENSE -ATF
In stock: 1049 pcs
RFQ

MLH025BSG17B
Manufacturers: Honeywell Sensing and Productivity Solutions
Description: MLH ALL METAL PRESS SENSE -ATF
In stock: 5935 pcs
RFQ

MLH025BGG13B
Manufacturers: Honeywell Sensing and Productivity Solutions
Description: MLH ALL METAL PRESS SENSE -ATF
In stock: 6818 pcs
RFQ

MLH025BSD14B
Manufacturers: Honeywell Sensing and Productivity Solutions
Description: SENSOR SEALED GAUGE 0-25 BAR
In stock: 931 pcs
RFQ

MLH025BSG01B
Manufacturers: Honeywell Sensing and Productivity Solutions
Description: SENSOR SEALED GAUGE 0-25 BAR
In stock: 953 pcs
RFQ

MLH025BSB01A
Manufacturers: Honeywell Sensing and Productivity Solutions
Description: MLH ALL METAL PRESS SENSE -ATF
In stock: 5206 pcs
RFQ

MLH025BGG08B
Manufacturers: Honeywell Sensing and Productivity Solutions
Description: SENSOR GAUGE 0-25 BAR
In stock: 999 pcs
RFQ

MLH025BSD14A
Manufacturers: Honeywell Sensing and Productivity Solutions
Description: SENSOR SEALED GAUGE 0-25 BAR
In stock: 3422 pcs
RFQ

MLH020BST10A
Manufacturers: Honeywell Sensing and Productivity Solutions
Description: SENSOR SEALED GAUGE 0-20 BAR
In stock: 1098 pcs
RFQ

MLH025BGD14B
Manufacturers: Honeywell Sensing and Productivity Solutions
Description: SENSOR GAUGE 0-25 BAR
In stock: 944 pcs
RFQ

Copyright © 2020 Reliable Distributor of Electronic Components

E-mail: Info@infinity-electronic.com
Address: 17F, Gaylord Commercial Building, 114-118 Lockhart Road, Wan Chai, Hong Kong