Honeywell | Honeywell Sensing and Productivity Solutions

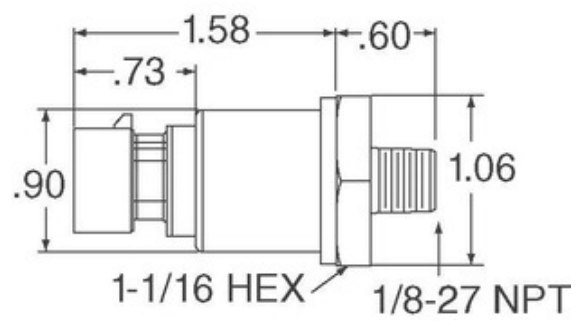

Image may be representation. See specifications for product details.

MLH100BSD14A

Part Number:	MLH100BSD14A
Manufacturer/Brand:	Honeywell Sensing and Productivity Solutions
Product description	SENSOR SEALED GAUGE 0-100 BAR
Datasheets:	1.MLH100BSD14A.pdf 2.MLH100BSD14A.pdf
RoHs Status	Lead free / RoHS Compliant
Stock Condition	3868 pcs stock
Ship From	Hong Kong
Shipment Way	DHL/Fedex/TNT/UPS/EMS

REQUEST FOR QUOTATION

Specifications of MLH100BSD14A

PART NUMBER	MLH100BSD14A
MANUFACTURER	Honeywell Sensing and Productivity Solutions
DESCRIPTION	SENSOR SEALED GAUGE 0-100 BAR
LEAD FREE STATUS / ROHS STATUS	Lead free / RoHS Compliant
QUANTITY AVAILABLE	3868 pcs
DATA SHEET	1.MLH100BSD14A.pdf 2.MLH100BSD14A.pdf
VOLTAGE - SUPPLY	5 V ~ 6 V
TERMINATION STYLE	M12
SUPPLIER DEVICE PACKAGE	-
SERIES	MLH
PRESSURE TYPE	Sealed Gauge
PORT STYLE	Threaded
PORT SIZE	Male - 1/4" (6.35mm) BSP
PACKAGE / CASE	Cylinder, Metal
OUTPUT TYPE	Analog Voltage
OUTPUT	0.5 V ~ 4.5 V
OPERATING TEMPERATURE	-40°C ~ 125°C
OPERATING PRESSURE	1450.38 PSI (10000 kPa)
MOISTURE SENSITIVITY LEVEL (MSL)	1 (Unlimited)
MAXIMUM PRESSURE	2900.75 PSI (20000 kPa)
LEAD FREE STATUS / ROHS STATUS	Lead free / RoHS Compliant
FEATURES	Amplified Output, Temperature Compensated
DETAILED DESCRIPTION	Pressure Sensor 1450.38 PSI (10000 kPa) Sealed Gauge Male - 1/4" (6.35mm) BSP 0.5 V ~ 4.5 V Cylinder, Metal
ACCURACY	±0.25%

Related Tags

Honeywell Sensing and Productivity Solutions MLH100BSD14A	MLH100BSD14A Distributor	MLH100BSD14A Supplier
MLH100BSD14A Price	MLH100BSD14A Pictures	MLH100BSD14A Image
MLH100BSD14A PDF Datasheet	MLH100BSD14A Download Datasheet	MLH100BSD14A Datasheet
MLH100BSD14A Stock	Buy MLH100BSD14A	Buy Honeywell Sensing and Productivity Solutions MLH100BSD14A
Honeywell Sensing and Productivity Solutions MLH100BSD14A	Honeywell Sensing and Productivity Solutions Supplier	Honeywell Sensing and Productivity Solutions Distributor
Honeywell Sensing and Productivity Solutions MLH100BSD14A	HONEYWELL MLH100BSD14A	Honeywell Sensing and Control EMEA MLH100BSD14A
Honeywell Sensing and Productivity Solutions T&M MLH100BSD14A		

Related Products

MLH100BSB13B
Manufacturers: Honeywell Sensing and Productivity Solutions
Description: MLH ALL METAL PRESS SENSE -ATF
In stock: 3780 pcs
RFQ

MLH100BSG02B
Manufacturers: Honeywell Sensing and Productivity Solutions
Description: MLH ALL METAL PRESS SENSE -ATF
In stock: 1169 pcs
RFQ

MLH08KPSB01B
Manufacturers: Honeywell Sensing and Productivity Solutions
Description: SENSOR AMP 8000PSI 4-20MA OUT
In stock: 4752 pcs
RFQ

MLH100BSB10A
Manufacturers: Honeywell Sensing and Productivity Solutions
Description: MLH ALL METAL PRESS SENSE -ATF
In stock: 959 pcs
RFQ

MLH08KPSL12A
Manufacturers: Honeywell Sensing and Productivity Solutions
Description: MLH ALL METAL PRESS SENSE -ATF
In stock: 766 pcs
RFQ

MLH100BSL03B
Manufacturers: Honeywell Sensing and Productivity Solutions
Description: SENSOR SEALED GAUGE 0-100 BAR
In stock: 5974 pcs
RFQ

MLH100BSG13B
Manufacturers: Honeywell Sensing and Productivity Solutions
Description: MLH ALL METAL PRESS SENSE -ATF
In stock: 3579 pcs
RFQ

MLH100BSD14B
Manufacturers: Honeywell Sensing and Productivity Solutions
Description: SENSOR SEALED GAUGE 0-100 BAR
In stock: 1158 pcs
RFQ

MLH08KPST03A
Manufacturers: Honeywell Sensing and Productivity Solutions
Description: MLH ALL METAL PRESS SENSE -ATF
In stock: 1122 pcs
RFQ

MLH100BSL14E
Manufacturers: Honeywell Sensing and Productivity Solutions
Description: MLH ALL METAL PRESS SENSE -ATF
In stock: 910 pcs
RFQ

MLH08KPSH03A
Manufacturers: Honeywell Sensing and Productivity Solutions
Description: MLH ALL METAL PRESS SENSE -ATF
In stock: 1073 pcs
RFQ

MLH100BSD14E
Manufacturers: Honeywell Sensing and Productivity Solutions
Description: SENSOR SEALED GAUGE 0-100 BAR
In stock: 909 pcs
RFQ

Copyright © 2020 Reliable Distributor of Electronic Components

E-mail: Info@infinity-electronic.com
Address: 17F, Gaylord Commercial Building, 114-118 Lockhart Road, Wan Chai, Hong Kong