Honeywell | Honeywell Sensing and Productivity Solutions

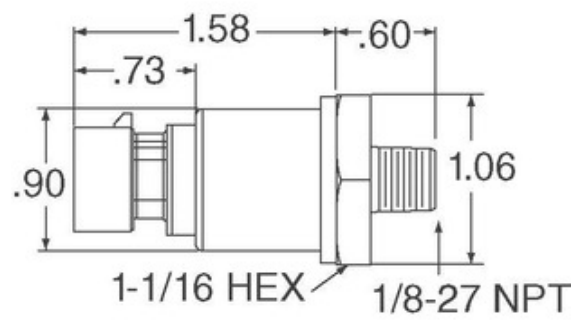

Image may be representation. See specifications for product details.

MLH016BGG13B

Part Number:	MLH016BGG13B
Manufacturer/Brand:	Honeywell Sensing and Productivity Solutions
Product description	MLH ALL METAL PRESS SENSE -ATF
Datasheets:	1.MLH016BGG13B.pdf 2.MLH016BGG13B.pdf
RoHs Status	Lead free / RoHS Compliant
Stock Condition	5141 pcs stock
Ship From	Hong Kong
Shipment Way	DHL/Fedex/TNT/UPS/EMS

REQUEST FOR QUOTATION

Specifications of MLH016BGG13B

PART NUMBER	MLH016BGG13B
MANUFACTURER	Honeywell Sensing and Productivity Solutions
DESCRIPTION	MLH ALL METAL PRESS SENSE -ATF
LEAD FREE STATUS / ROHS STATUS	Lead free / RoHS Compliant
QUANTITY AVAILABLE	5141 pcs
DATA SHEET	1.MLH016BGG13B.pdf 2.MLH016BGG13B.pdf
VOLTAGE - SUPPLY	9.5 V ~ 30 V
SUPPLIER DEVICE PACKAGE	-
SERIES	MLH
PRESSURE TYPE	Vented Gauge
PORT STYLE	Threaded
PORT SIZE	Male - 1/4" (6.35mm) BSPT
PACKAGE / CASE	Cylinder, Metal
OUTPUT TYPE	Analog Current
OUTPUT	4 mA ~ 20 mA
OPERATING TEMPERATURE	-40°C ~ 125°C
OPERATING PRESSURE	232.06 PSI (1600 kPa)
MOISTURE SENSITIVITY LEVEL (MSL)	1 (Unlimited)
MAXIMUM PRESSURE	696.18 PSI (4800 kPa)
LEAD FREE STATUS / ROHS STATUS	Lead free / RoHS Compliant
FEATURES	Amplified Output, Temperature Compensated
DETAILED DESCRIPTION	Pressure Sensor 232.06 PSI (1600 kPa) Vented Gauge Male - 1/4" (6.35mm) BSPT 4 mA ~ 20 mA Cylinder, Metal
ACCURACY	±0.25%

Related Tags

Honeywell Sensing and Productivity Solutions MLH016BGG13B	MLH016BGG13B Distributor	MLH016BGG13B Supplier
MLH016BGG13B Price	MLH016BGG13B Pictures	MLH016BGG13B Image
MLH016BGG13B PDF Datasheet	MLH016BGG13B Download Datasheet	MLH016BGG13B Datasheet
MLH016BGG13B Stock	Buy MLH016BGG13B	Buy Honeywell Sensing and Productivity Solutions MLH016BGG13B
Honeywell Sensing and Productivity Solutions MLH016BGG13B	Honeywell Sensing and Productivity Solutions Supplier	Honeywell Sensing and Productivity Solutions Distributor
Honeywell Sensing and Productivity Solutions MLH016BGG13B	HONEYWELL MLH016BGG13B	Honeywell Sensing and Control EMEA MLH016BGG13B
Honeywell Sensing and Productivity Solutions T&M MLH016BGG13B		

Related Products

MLH016BGG01E
Manufacturers: Honeywell Sensing and Productivity Solutions
Description: SENSOR GAUGE 0-16 BAR
In stock: 880 pcs
RFQ

MLH016BGG01B
Manufacturers: Honeywell Sensing and Productivity Solutions
Description: MLH ALL METAL PRESS SENSE -ATF
In stock: 3734 pcs
RFQ

MLH016BGL01B
Manufacturers: Honeywell Sensing and Productivity Solutions
Description: MLH ALL METAL PRESS SENSE -ATF
In stock: 4981 pcs
RFQ

MLH016BGG14D
Manufacturers: Honeywell Sensing and Productivity Solutions
Description: MLH ALL METAL PRESS SENSE -ATF
In stock: 988 pcs
RFQ

MLH016BGG20G
Manufacturers: Honeywell Sensing and Productivity Solutions
Description: SENSOR GAUGE 0-16 BAR
In stock: 800 pcs
RFQ

MLH016BGD14B
Manufacturers: Honeywell Sensing and Productivity Solutions
Description: SENSOR GAUGE 0-16 BAR
In stock: 975 pcs
RFQ

MLH016BGL14A
Manufacturers: Honeywell Sensing and Productivity Solutions
Description: MLH ALL METAL PRESS SENSE -ATF
In stock: 952 pcs
RFQ

MLH016BGG20B
Manufacturers: Honeywell Sensing and Productivity Solutions
Description: SENSOR GAUGE 0-16 BAR
In stock: 1060 pcs
RFQ

MLH016BGG02B
Manufacturers: Honeywell Sensing and Productivity Solutions
Description: MLH ALL METAL PRESS SENSE -ATF
In stock: 1193 pcs
RFQ

MLH016BGD17D
Manufacturers: Honeywell Sensing and Productivity Solutions
Description: MLH ALL METAL PRESS SENSE -ATF
In stock: 875 pcs
RFQ

MLH016BGL06B
Manufacturers: Honeywell Sensing and Productivity Solutions
Description: MLH ALL METAL PRESS SENSE -ATF
In stock: 6322 pcs
RFQ

MLH016BGD14E
Manufacturers: Honeywell Sensing and Productivity Solutions
Description: SENSOR GAUGE 0-16 BAR
In stock: 833 pcs
RFQ

Copyright © 2020 Reliable Distributor of Electronic Components

E-mail: Info@infinity-electronic.com
Address: 17F, Gaylord Commercial Building, 114-118 Lockhart Road, Wan Chai, Hong Kong