Honeywell | Honeywell Sensing and Productivity Solutions

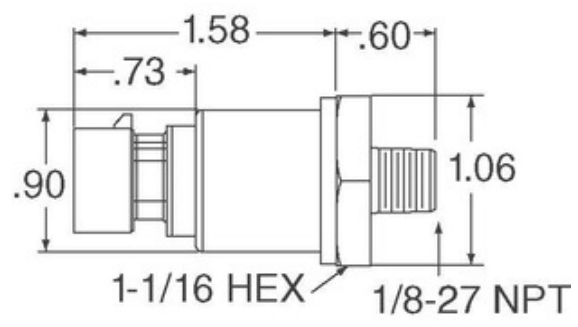

Image may be representation. See specifications for product details.

MLH250BSM14A

Part Number:	MLH250BSM14A
Manufacturer/Brand:	Honeywell Sensing and Productivity Solutions
Product description	SENSOR SEALED GAUGE 0-250 BAR
Datasheets:	1.MLH250BSM14A.pdf 2.MLH250BSM14A.pdf
RoHs Status	Lead free / RoHS Compliant
Stock Condition	866 pcs stock
Ship From	Hong Kong
Shipment Way	DHL/Fedex/TNT/UPS/EMS

REQUEST FOR QUOTATION

Specifications of MLH250BSM14A

PART NUMBER	MLH250BSM14A
MANUFACTURER	Honeywell Sensing and Productivity Solutions
DESCRIPTION	SENSOR SEALED GAUGE 0-250 BAR
LEAD FREE STATUS / ROHS STATUS	Lead free / RoHS Compliant
QUANTITY AVAILABLE	866 pcs
DATA SHEET	1.MLH250BSM14A.pdf 2.MLH250BSM14A.pdf
VOLTAGE - SUPPLY	5 V ~ 6 V
TERMINATION STYLE	Cable 3m
SUPPLIER DEVICE PACKAGE	-
SERIES	MLH
PRESSURE TYPE	Sealed Gauge
PORT STYLE	Threaded
PORT SIZE	Male - 1/4" (6.35mm) BSP
PACKAGE / CASE	Cylinder, Metal
OUTPUT TYPE	Analog Voltage
OUTPUT	0.5 V ~ 4.5 V
OPERATING TEMPERATURE	-40°C ~ 125°C
OPERATING PRESSURE	3625.94 PSI (25000 kPa)
MOISTURE SENSITIVITY LEVEL (MSL)	1 (Unlimited)
MAXIMUM PRESSURE	7251.89 PSI (50000 kPa)
LEAD FREE STATUS / ROHS STATUS	Lead free / RoHS Compliant
FEATURES	Amplified Output, Temperature Compensated
DETAILED DESCRIPTION	Pressure Sensor 3625.94 PSI (25000 kPa) Sealed Gauge Male - 1/4" (6.35mm) BSP 0.5 V ~ 4.5 V Cylinder, Metal
ACCURACY	±0.25%

Related Tags

- Honeywell Sensing and Productivity Solutions MLH250BSM14A
- MLH250BSM14A Distributor
- MLH250BSM14A Supplier
- MLH250BSM14A Price
- MLH250BSM14A Pictures
- MLH250BSM14A Image
- MLH250BSM14A PDF Datasheet
- MLH250BSM14A Download Datasheet
- MLH250BSM14A Datasheet
- MLH250BSM14A Stock
- Buy MLH250BSM14A
- Buy Honeywell Sensing and Productivity Solutions MLH250BSM14A
- Honeywell Sensing and Productivity Solutions MLH250BSM14A
- Honeywell Sensing and Productivity Solutions Supplier
- Honeywell Sensing and Productivity Solutions Distributor
- Honeywell Sensing and Productivity Solutions MLH250BSM14A
- HONEYWELL MLH250BSM14A
- Honeywell Sensing and Control EMEA MLH250BSM14A
- Honeywell Sensing and Productivity Solutions T&M MLH250BSM14A

Related Products

MLH250BSH14A
Manufacturers: Honeywell Sensing and Productivity Solutions
Description: SENSOR SEALED GAUGE 0-250 BAR
In stock: 1208 pcs
RFQ

MLH250BSG17D
Manufacturers: Honeywell Sensing and Productivity Solutions
Description: MLH ALL METAL PRESS SENSE -ATF
In stock: 921 pcs
RFQ

MLH250PGB01A
Manufacturers: Honeywell Sensing and Productivity Solutions
Description: SENSOR GAUGE 0-250 PSI
In stock: 920 pcs
RFQ

MLH250PGB06A
Manufacturers: Honeywell Sensing and Productivity Solutions
Description: MLH ALL METAL PRESS SENSE -ATF
In stock: 802 pcs
RFQ

MLH250BSM17D
Manufacturers: Honeywell Sensing and Productivity Solutions
Description: MLH ALL METAL PRESS SENSE -ATF
In stock: 5646 pcs
RFQ

MLH250BST12E
Manufacturers: Honeywell Sensing and Productivity Solutions
Description: MLH ALL METAL PRESS SENSE -ATF
In stock: 827 pcs
RFQ

MLH250PGB06G
Manufacturers: Honeywell Sensing and Productivity Solutions
Description: SENSOR AMP 250PSI 1-5VDC OUT
In stock: 708 pcs
RFQ

MLH250BSL14E
Manufacturers: Honeywell Sensing and Productivity Solutions
Description: MLH ALL METAL PRESS SENSE -ATF
In stock: 824 pcs
RFQ

MLH250BSL14A
Manufacturers: Honeywell Sensing and Productivity Solutions
Description: SENSOR SEALED GAUGE 0-250 BAR
In stock: 869 pcs
RFQ

MLH250BSL01B
Manufacturers: Honeywell Sensing and Productivity Solutions
Description: MLH ALL METAL PRESS SENSE -ATF
In stock: 921 pcs
RFQ

MLH250BSL01A
Manufacturers: Honeywell Sensing and Productivity Solutions
Description: MLH ALL METAL PRESS SENSE -ATF
In stock: 3588 pcs
RFQ

MLH250BST08E
Manufacturers: Honeywell Sensing and Productivity Solutions
Description: PRESSURE
In stock: 1020 pcs
RFQ

Copyright © 2020 Reliable Distributor of Electronic Components

E-mail: Info@infinity-electronic.com
Address: 17F, Gaylord Commercial Building, 114-118 Lockhart Road, Wan Chai, Hong Kong