Honeywell | Honeywell Sensing and Productivity Solutions

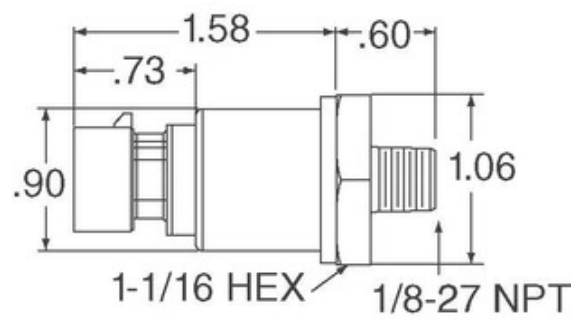

Image may be representation. See specifications for product details.

MLH200PSG06C

Part Number:	MLH200PSG06C
Manufacturer/Brand:	Honeywell Sensing and Productivity Solutions
Product description	SENSOR SEALED GAUGE 0-200 PSI
Datasheets:	1.MLH200PSG06C.pdf 2.MLH200PSG06C.pdf
RoHs Status	Lead free / RoHS Compliant
Stock Condition	803 pcs stock
Ship From	Hong Kong
Shipment Way	DHL/Fedex/TNT/UPS/EMS

REQUEST FOR QUOTATION

Specifications of MLH200PSG06C

PART NUMBER	MLH200PSG06C
MANUFACTURER	Honeywell Sensing and Productivity Solutions
DESCRIPTION	SENSOR SEALED GAUGE 0-200 PSI
LEAD FREE STATUS / ROHS STATUS	Lead free / RoHS Compliant
QUANTITY AVAILABLE	803 pcs
DATA SHEET	1.MLH200PSG06C.pdf 2.MLH200PSG06C.pdf
VOLTAGE - SUPPLY	8 V ~ 30 V
TERMINATION STYLE	DIN
SUPPLIER DEVICE PACKAGE	-
SERIES	MLH
PRESSURE TYPE	Sealed Gauge
PORT STYLE	Threaded
PORT SIZE	Male - 1/8" (3.18mm) NPT
PACKAGE / CASE	Cylinder, Metal
OUTPUT TYPE	Analog Voltage
OUTPUT	1 V ~ 6 V
OPERATING TEMPERATURE	-40°C ~ 125°C
OPERATING PRESSURE	200 PSI (1378.95 kPa)
MOISTURE SENSITIVITY LEVEL (MSL)	1 (Unlimited)
MAXIMUM PRESSURE	600 PSI (4136.85 kPa)
LEAD FREE STATUS / ROHS STATUS	Lead free / RoHS Compliant
FEATURES	Amplified Output, Temperature Compensated
DETAILED DESCRIPTION	Pressure Sensor 200 PSI (1378.95 kPa) Sealed Gauge Male - 1/8" (3.18mm) NPT 1 V ~ 6 V Cylinder, Metal
ACCURACY	±0.25%

Related Tags

Honeywell Sensing and Productivity Solutions MLH200PSG06C	MLH200PSG06C Distributor	MLH200PSG06C Supplier
MLH200PSG06C Price	MLH200PSG06C Pictures	MLH200PSG06C Image
MLH200PSG06C PDF Datasheet	MLH200PSG06C Download Datasheet	MLH200PSG06C Datasheet
MLH200PSG06C Stock	Buy MLH200PSG06C	Buy Honeywell Sensing and Productivity Solutions MLH200PSG06C
Honeywell Sensing and Productivity Solutions MLH200PSG06C	Honeywell Sensing and Productivity Solutions Supplier	Honeywell Sensing and Productivity Solutions Distributor
Honeywell Sensing and Productivity Solutions MLH200PSG06C	HONEYWELL MLH200PSG06C	Honeywell Sensing and Control EMEA MLH200PSG06C
Honeywell Sensing and Productivity Solutions T&M MLH200PSG06C		

Related Products

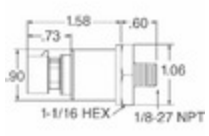

MLH200PGT06B
Manufacturers: Honeywell Sensing and Productivity Solutions
Description: MLH ALL METAL PRESS SENSE -ATF
In stock: 6364 pcs
RFQ

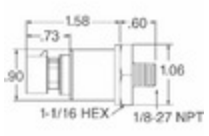

MLH250BGB10A
Manufacturers: Honeywell Sensing and Productivity Solutions
Description: MLH ALL METAL PRESS SENSE -ATF
In stock: 924 pcs
RFQ

MLH200PSB09C
Manufacturers: Honeywell Sensing and Productivity Solutions
Description: SENSOR AMP 200PSI 1-6VDC OUT
In stock: 3866 pcs
RFQ

MLH2012F22NKT000
Manufacturers: TDK Corporation
Description: FIXED IND 22NH 1.85A 44 MOHM SMD
In stock: 1127488 pcs
RFQ

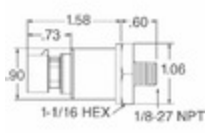

MLH200PSB09A
Manufacturers: Honeywell Sensing and Productivity Solutions
Description: MLH ALL METAL PRESS SENSE -ATF
In stock: 3168 pcs
RFQ

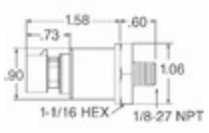

MLH200PSB01B
Manufacturers: Honeywell Sensing and Productivity Solutions
Description: SENSOR SEALED GAUGE 0-200 PSI
In stock: 1111 pcs
RFQ

MLH200PSB06B
Manufacturers: Honeywell Sensing and Productivity Solutions
Description: SENSOR AMP 200PSI 4-20MA OUT
In stock: 951 pcs
RFQ

MLH200PSL09A
Manufacturers: Honeywell Sensing and Productivity Solutions
Description: SENSOR AMP 200PSI .5-4.5VDC OUT
In stock: 1051 pcs
RFQ

MLH200PSL06A
Manufacturers: Honeywell Sensing and Productivity Solutions
Description: SENSOR SEALED GAUGE 0-200 PSI
In stock: 5961 pcs
RFQ

MLH200PSL01A
Manufacturers: Honeywell Sensing and Productivity Solutions
Description: SENSOR SEALED GAUGE 0-200 PSI
In stock: 761 pcs
RFQ

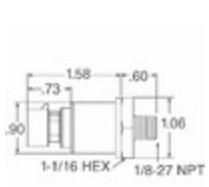

MLH225PSB06A
Manufacturers: Honeywell Sensing and Productivity Solutions
Description: SENSOR SEALED GAUGE 0-225 PSI
In stock: 4025 pcs
RFQ

MLH200PSB06A
Manufacturers: Honeywell Sensing and Productivity Solutions
Description: SENSOR AMP 200PSI .5-4.5VDC OUT
In stock: 852 pcs
RFQ

Copyright © 2020 Reliable Distributor of Electronic Components

E-mail: Info@infinity-electronic.com
Address: 17F, Gaylord Commercial Building, 114-118 Lockhart Road, Wan Chai, Hong Kong