Panasonic | Panasonic

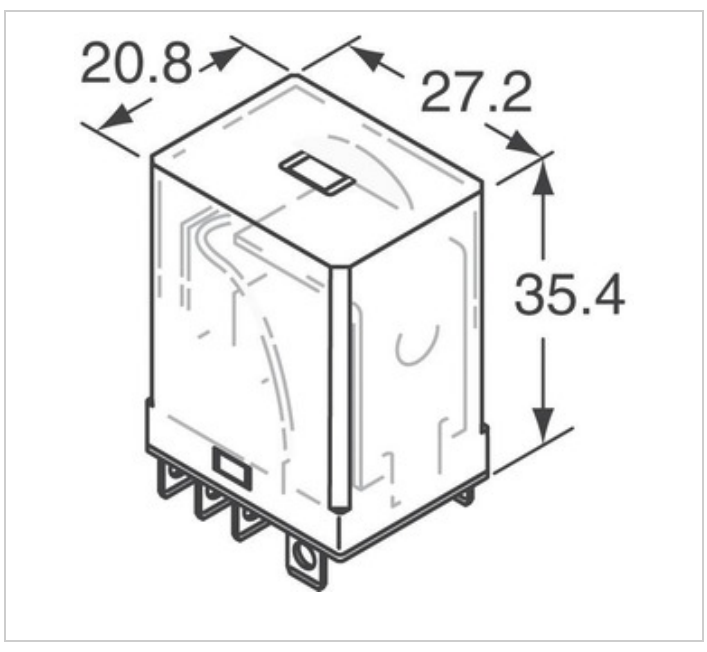

Image may be representation. See specifications for product details.

HL2-H-DC100V-F

Part Number:	HL2-H-DC100V-F
Manufacturer/Brand:	Panasonic
Product description	HL2 RELAY 2 FORM C 100VDC
Datasheets:	HL2-H-DC100V-F.pdf
RoHs Status	Lead free / RoHS Compliant
Stock Condition	9034 pcs stock
Ship From	Hong Kong
Shipment Way	DHL/Fedex/TNT/UPS/EMS

REQUEST FOR QUOTATION

Specifications of HL2-H-DC100V-F

PART NUMBER	HL2-H-DC100V-F
MANUFACTURER	Panasonic
DESCRIPTION	HL2 RELAY 2 FORM C 100VDC
LEAD FREE STATUS / ROHS STATUS	Lead free / RoHS Compliant
QUANTITY AVAILABLE	9034 pcs
DATA SHEET	HL2-H-DC100V-F.pdf
SERIES	*
MOISTURE SENSITIVITY LEVEL (MSL)	1 (Unlimited)
LEAD FREE STATUS / ROHS STATUS	Lead free / RoHS Compliant
DETAILED DESCRIPTION	Relay Coil

Related Tags

Panasonic HL2-H-DC100V-F	HL2-H-DC100V-F Distributor	HL2-H-DC100V-F Supplier
HL2-H-DC100V-F Price	HL2-H-DC100V-F Pictures	HL2-H-DC100V-F Image
HL2-H-DC100V-F PDF Datasheet	HL2-H-DC100V-F Download Datasheet	HL2-H-DC100V-F Datasheet
HL2-H-DC100V-F Stock	Buy HL2-H-DC100V-F	Buy Panasonic HL2-H-DC100V-F
Panasonic HL2-H-DC100V-F	Panasonic Supplier	Panasonic Distributor
Panasonic HL2-H-DC100V-F	Panasonic - Consumer Division HL2-H-DC100V-F	Panasonic - Consumer Electronics Corp. HL2-H-DC100V-F
Panasonic Battery Group HL2-H-DC100V-F	Panasonic Electric Works - ACSD HL2-H-DC100V-F	Panasonic Electronic Components - Semiconductor Pr HL2-H-DC100V-F
Panasonic - ATG HL2-H-DC100V-F	Panasonic - BSG HL2-H-DC100V-F	Panasonic - DTG HL2-H-DC100V-F
Panasonic Electric Works HL2-H-DC100V-F	Panasonic Electronic Components HL2-H-DC100V-F	Panasonic Industrial Automation Sales HL2-H-DC100V-F
Panasonic Semiconductor HL2-H-DC100V-F		

Related Products

HL2-H-DC24V-D-H47
Manufacturers: Panasonic
Description: RELAY GENERAL PURPOSE
In stock: 2805 pcs
RFQ

HL2-H-DC12V-F
Manufacturers: Panasonic
Description: RELAY GEN PURPOSE DPDT 10A 12V
In stock: 8215 pcs
RFQ

HL2-H-AC48V-F
Manufacturers: Panasonic
Description: RELAY GEN PURPOSE DPDT 10A 48V
In stock: 9945 pcs
RFQ

HL2-H-AC24V-F
Manufacturers: Panasonic
Description: RELAY GEN PURPOSE DPDT 10A 24V
In stock: 8121 pcs
RFQ

HL2-H-DC24V
Manufacturers: Panasonic
Description: RELAY GEN PURPOSE DPDT 10A 24V
In stock: 3659 pcs
RFQ

HL2-H-AC6V-F
Manufacturers: Panasonic
Description: RELAY GEN PURPOSE DPDT 10A 6V
In stock: 9942 pcs
RFQ

HL2-H-AC48V
Manufacturers: Panasonic
Description: RELAY GEN PURPOSE DPDT 10A 48V
In stock: 3896 pcs
RFQ

HL2-H-DC110V
Manufacturers: Panasonic
Description: RELAY GEN PURPOSE DPDT 10A 110V
In stock: 3967 pcs
RFQ

HL2-H-AC6V
Manufacturers: Panasonic
Description: RELAY GEN PURPOSE DPDT 10A 6V
In stock: 5831 pcs
RFQ

HL2-H-AC24V
Manufacturers: Panasonic
Description: RELAY GEN PURPOSE DPDT 10A 24V
In stock: 5608 pcs
RFQ

HL2-H-DC110V-F
Manufacturers: Panasonic
Description: RELAY GEN PURPOSE DPDT 10A 110V
In stock: 8802 pcs
RFQ

HL2-H-DC12V
Manufacturers: Panasonic
Description: RELAY GEN PURPOSE DPDT 10A 12V
In stock: 5702 pcs
RFQ

Copyright © 2020 Reliable Distributor of Electronic Components
E-mail: Info@infinity-electronic.com
Address: 17F, Gaylord Commercial Building, 114-118 Lockhart Road, Wan Chai, Hong Kong