Honeywell | Honeywell Sensing and Productivity Solutions

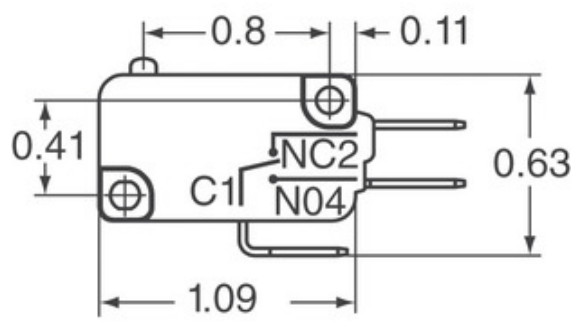

Image may be representation. See specifications for product details.

V15T16-CC300A01-K

Part Number:	V15T16-CC300A01-K
Manufacturer/Brand:	Honeywell Sensing and Productivity Solutions
Product description	SWITCH SNAP ACT SPST-NC 16A 250V
Datasheets:	1.V15T16-CC300A01-K.pdf 2.V15T16-CC300A01-K.pdf 3.V15T16-CC300A01-K.pdf
RoHs Status	Lead free / RoHS Compliant
Stock Condition	6847 pcs stock
Ship From	Hong Kong
Shipment Way	DHL/Fedex/TNT/UPS/EMS

REQUEST FOR QUOTATION

Specifications of V15T16-CC300A01-K

PART NUMBER	V15T16-CC300A01-K
MANUFACTURER	Honeywell Sensing and Productivity Solutions
DESCRIPTION	SWITCH SNAP ACT SPST-NC 16A 250V
LEAD FREE STATUS / ROHS STATUS	Lead free / RoHS Compliant
QUANTITY AVAILABLE	6847 pcs
DATA SHEET	1.V15T16-CC300A01-K.pdf 2.V15T16-CC300A01-K.pdf 3.V15T16-CC300A01-K.pdf
VOLTAGE RATING - AC	250V
TERMINATION STYLE	Quick Connect - 0.250" (6.3mm)
SWITCH FUNCTION	On-Mom
SERIES	V15
RELEASE FORCE	75gf
PRETRAVEL	0.063" (1.6mm)
PACKAGING	Bulk
OVERTRAVEL	0.030" (0.76mm)
OPERATING TEMPERATURE	-25°C ~ 125°C
OPERATING POSITION	0.602" (15.3mm)
OPERATING FORCE	300gf
MOUNTING TYPE	Chassis Mount
MOISTURE SENSITIVITY LEVEL (MSL)	1 (Unlimited)
MECHANICAL LIFE	1,000,000 Cycles
LEAD FREE STATUS / ROHS STATUS	Lead free / RoHS Compliant
INGRESS PROTECTION	-
FEATURES	-
ELECTRICAL LIFE	50,000 Cycles
DIFFERENTIAL TRAVEL	0.016" (0.4mm)
CURRENT RATING	16A (AC)
CIRCUIT	SPST-NC
ACTUATOR TYPE	Lever, Straight

Related Tags

Honeywell Sensing and Productivity Solutions V15T16-CC300A01-K	V15T16-CC300A01-K Distributor	V15T16-CC300A01-K Supplier
V15T16-CC300A01-K Price	V15T16-CC300A01-K Pictures	V15T16-CC300A01-K Image
V15T16-CC300A01-K PDF Datasheet	V15T16-CC300A01-K Download Datasheet	V15T16-CC300A01-K Datasheet
V15T16-CC300A01-K Stock	Buy V15T16-CC300A01-K	Buy Honeywell Sensing and Productivity Solutions V15T16-CC300A01-K
Honeywell Sensing and Productivity Solutions V15T16-CC300A01-K	Honeywell Sensing and Productivity Solutions Supplier	Honeywell Sensing and Productivity Solutions Distributor
Honeywell Sensing and Productivity Solutions V15T16-CC300A01-K	HONEYWELL V15T16-CC300A01-K	Honeywell Sensing and Control EMEA V15T16-CC300A01-K
Honeywell Sensing and Productivity Solutions T&M V15T16-CC300A01-K		

Related Products

V15T16-CP100-30
Manufacturers: Honeywell Sensing and Productivity Solutions
Description: BASIC SWITCH V BASICS V15
In stock: 3357 pcs
RFQ

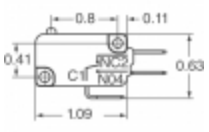

V15T16-CC300A05-K
Manufacturers: Honeywell Sensing and Productivity Solutions
Description: SWITCH SNAP ACT SPST-NC 16A 250V
In stock: 55586 pcs
RFQ

V15T16-CC400
Manufacturers: Honeywell Sensing and Productivity Solutions
Description: BASIC SWITCH V BASICS V15
In stock: 72286 pcs
RFQ

V15T16-CP100-301
Manufacturers: Honeywell Sensing and Productivity Solutions
Description: BASIC SWITCH V BASICS V15
In stock: 64440 pcs
RFQ

V15T16-CC100A01-K
Manufacturers: Honeywell Sensing and Productivity Solutions
Description: SWITCH SNAP ACT SPST-NC 16A 250V
In stock: 56595 pcs
RFQ

V15T16-CC300-K
Manufacturers: Honeywell Sensing and Productivity Solutions
Description: SWITCH SNAP ACT SPST-NC 16A 250V
In stock: 25764 pcs
RFQ

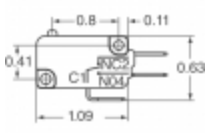

V15T16-CP100-01
Manufacturers: Honeywell Sensing and Productivity Solutions
Description: SWITCH SNAP ACT SPST-NO 16A 250V
In stock: 67173 pcs
RFQ

V15T16-CP100
Manufacturers: Honeywell Sensing and Productivity Solutions
Description: BASIC SWITCH V BASICS V15
In stock: 63945 pcs
RFQ

V15T16-CC100A05-K
Manufacturers: Honeywell Sensing and Productivity Solutions
Description: SWITCH SNAP ACT SPST-NC 16A 250V
In stock: 29971 pcs
RFQ

V15T16-CC100A05
Manufacturers: Honeywell Sensing and Productivity Solutions
Description: BASIC SWITCH V BASICS V15
In stock: 2994 pcs
RFQ

V15T16-CC200
Manufacturers: Honeywell Sensing and Productivity Solutions
Description: SWITCH SNAP ACT SPST-NC 16A 250V
In stock: 30042 pcs
RFQ

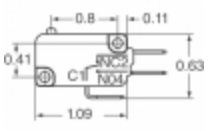

V15T16-CC200-K
Manufacturers: Honeywell Sensing and Productivity Solutions
Description: SWITCH SNAP ACT SPST-NC 16A 250V
In stock: 74846 pcs
RFQ

Copyright © 2020 Reliable Distributor of Electronic Components

E-mail: Info@infinity-electronic.com
Address: 17F, Gaylord Commercial Building, 114-118 Lockhart Road, Wan Chai, Hong Kong