Honeywell | Honeywell Sensing and Productivity Solutions

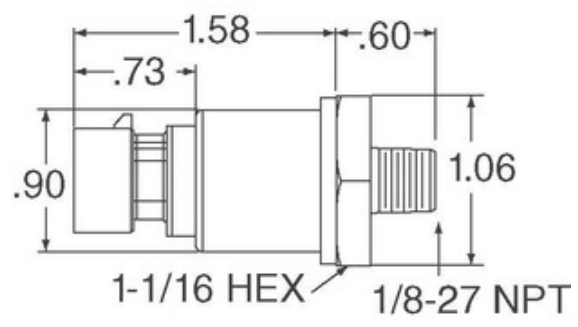

Image may be representation. See specifications for product details.

MLH550BSD14C

Part Number:	MLH550BSD14C
Manufacturer/Brand:	Honeywell Sensing and Productivity Solutions
Product description	SENSOR SEALED GAUGE 0-550 BAR
Datasheets:	1.MLH550BSD14C.pdf 2.MLH550BSD14C.pdf
RoHs Status	Lead free / RoHS Compliant
Stock Condition	807 pcs stock
Ship From	Hong Kong
Shipment Way	DHL/Fedex/TNT/UPS/EMS

REQUEST FOR QUOTATION

Specifications of MLH550BSD14C

PART NUMBER	MLH550BSD14C
MANUFACTURER	Honeywell Sensing and Productivity Solutions
DESCRIPTION	SENSOR SEALED GAUGE 0-550 BAR
LEAD FREE STATUS / ROHS STATUS	Lead free / RoHS Compliant
QUANTITY AVAILABLE	807 pcs
DATA SHEET	1.MLH550BSD14C.pdf 2.MLH550BSD14C.pdf
VOLTAGE - SUPPLY	8 V ~ 30 V
TERMINATION STYLE	M12
SUPPLIER DEVICE PACKAGE	-
SERIES	MLH
PRESSURE TYPE	Sealed Gauge
PORT STYLE	Threaded
PORT SIZE	Male - 1/4" (6.35mm) BSP
PACKAGE / CASE	Cylinder, Metal
OUTPUT TYPE	Analog Voltage
OUTPUT	1 V ~ 6 V
OPERATING TEMPERATURE	-40°C ~ 125°C
OPERATING PRESSURE	7977.08 PSI (55000 kPa)
MOISTURE SENSITIVITY LEVEL (MSL)	1 (Unlimited)
MAXIMUM PRESSURE	11965.61 PSI (82500 kPa)
LEAD FREE STATUS / ROHS STATUS	Lead free / RoHS Compliant
FEATURES	Amplified Output, Temperature Compensated
DETAILED DESCRIPTION	Pressure Sensor 7977.08 PSI (55000 kPa) Sealed Gauge Male - 1/4" (6.35mm) BSP 1 V ~ 6 V Cylinder, Metal
ACCURACY	±0.25%

Related Tags

- Honeywell Sensing and Productivity Solutions MLH550BSD14C
- MLH550BSD14C Distributor
- MLH550BSD14C Supplier
- MLH550BSD14C Price
- MLH550BSD14C Pictures
- MLH550BSD14C Image
- MLH550BSD14C PDF Datasheet
- MLH550BSD14C Download Datasheet
- MLH550BSD14C Datasheet
- MLH550BSD14C Stock
- Buy MLH550BSD14C
- Buy Honeywell Sensing and Productivity Solutions MLH550BSD14C
- Honeywell Sensing and Productivity Solutions MLH550BSD14C
- Honeywell Sensing and Productivity Solutions Supplier
- Honeywell Sensing and Productivity Solutions Distributor
- Honeywell Sensing and Productivity Solutions MLH550BSD14C
- HONEYWELL MLH550BSD14C
- Honeywell Sensing and Control EMEA MLH550BSD14C
- Honeywell Sensing and Productivity Solutions T&M MLH550BSD14C

Related Products

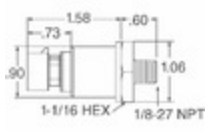

MLH550BSB01A
Manufacturers: Honeywell Sensing and Productivity Solutions
Description: MLH ALL METAL PRESS SENSE -ATF
In stock: 6071 pcs
RFQ

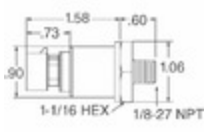

MLH700PSB09A
Manufacturers: Honeywell Sensing and Productivity Solutions
Description: MLH ALL METAL PRESS SENSE -ATF
In stock: 4176 pcs
RFQ

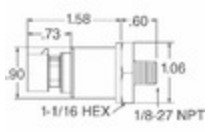

MLH600PSM09B
Manufacturers: Honeywell Sensing and Productivity Solutions
Description: SENSOR SEALED GAUGE 0-600 PSI
In stock: 3243 pcs
RFQ

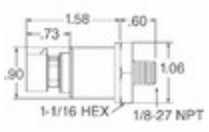

MLH500PST02A
Manufacturers: Honeywell Sensing and Productivity Solutions
Description: MLH ALL METAL PRESS SENSE -ATF
In stock: 966 pcs
RFQ

MLH500PSP06C
Manufacturers: Honeywell Sensing and Productivity Solutions
Description: SENSOR AMP 500PSI 1-6VDC OUT
In stock: 845 pcs
RFQ

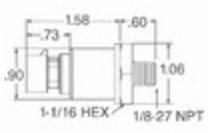

MLH500PST12E
Manufacturers: Honeywell Sensing and Productivity Solutions
Description: MLH ALL METAL PRESS SENSE -ATF
In stock: 945 pcs
RFQ

MLH500PST10A
Manufacturers: Honeywell Sensing and Productivity Solutions
Description: SENSOR AMP 500PSI .5-4.5VDC OUT
In stock: 1021 pcs
RFQ

MLH550BST01A
Manufacturers: Honeywell Sensing and Productivity Solutions
Description: MLH ALL METAL PRESS SENSE -ATF
In stock: 5265 pcs
RFQ

MLH600PSB09A
Manufacturers: Honeywell Sensing and Productivity Solutions
Description: SENSOR SEALED GAUGE 0-600 PSI
In stock: 3293 pcs
RFQ

MLH500PST06A
Manufacturers: Honeywell Sensing and Productivity Solutions
Description: MLH ALL METAL PRESS SENSE -ATF
In stock: 989 pcs
RFQ

MLH550BSD14E
Manufacturers: Honeywell Sensing and Productivity Solutions
Description: SENSOR SEALED GAUGE 0-550 BAR
In stock: 991 pcs
RFQ

MLH600PSB01A
Manufacturers: Honeywell Sensing and Productivity Solutions
Description: MLH ALL METAL PRESS SENSE -ATF
In stock: 3882 pcs
RFQ

Copyright © 2020 Reliable Distributor of Electronic Components

E-mail: Info@infinity-electronic.com
Address: 17F, Gaylord Commercial Building, 114-118 Lockhart Road, Wan Chai, Hong Kong