Honeywell | Honeywell Sensing and Productivity Solutions

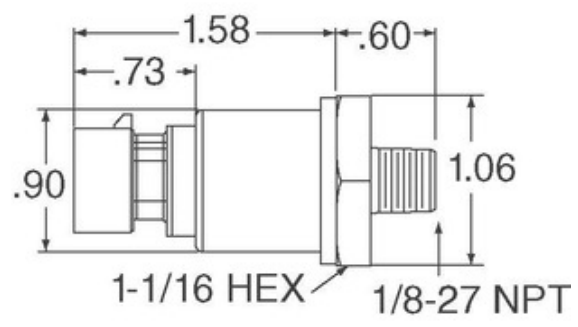

Image may be representation. See specifications for product details.

MLH400BSB01D

Part Number:	MLH400BSB01D
Manufacturer/Brand:	Honeywell Sensing and Productivity Solutions
Product description	MLH ALL METAL PRESS SENSE -ATF
Datasheets:	1.MLH400BSB01D.pdf 2.MLH400BSB01D.pdf
RoHs Status	Lead free / RoHS Compliant
Stock Condition	3860 pcs stock
Ship From	Hong Kong
Shipment Way	DHL/Fedex/TNT/UPS/EMS

REQUEST FOR QUOTATION

Specifications of MLH400BSB01D

PART NUMBER	MLH400BSB01D
MANUFACTURER	Honeywell Sensing and Productivity Solutions
DESCRIPTION	MLH ALL METAL PRESS SENSE -ATF
LEAD FREE STATUS / ROHS STATUS	Lead free / RoHS Compliant
QUANTITY AVAILABLE	3860 pcs
DATA SHEET	1.MLH400BSB01D.pdf 2.MLH400BSB01D.pdf
VOLTAGE - SUPPLY	14 V ~ 30 V
TERMINATION STYLE	Connector
SUPPLIER DEVICE PACKAGE	-
SERIES	MLH
PRESSURE TYPE	Sealed Gauge
PORT STYLE	Threaded
PORT SIZE	Male - 1/4" (6.35mm) NPT
PACKAGE / CASE	Cylinder, Metal
OUTPUT TYPE	Analog Voltage
OUTPUT	0.25 V ~ 10.25 V
OPERATING TEMPERATURE	-40°C ~ 125°C
OPERATING PRESSURE	5801.51 PSI (40000 kPa)
MOISTURE SENSITIVITY LEVEL (MSL)	1 (Unlimited)
MAXIMUM PRESSURE	-
LEAD FREE STATUS / ROHS STATUS	Lead free / RoHS Compliant
FEATURES	Amplified Output, Temperature Compensated
DETAILED DESCRIPTION	Pressure Sensor 5801.51 PSI (40000 kPa) Sealed Gauge Male - 1/4" (6.35mm) NPT 0.25 V ~ 10.25 V Cylinder, Metal
ACCURACY	±0.25%

Related Tags

- Honeywell Sensing and Productivity Solutions MLH400BSB01D
- MLH400BSB01D Distributor
- MLH400BSB01D Supplier
- MLH400BSB01D Price
- MLH400BSB01D Pictures
- MLH400BSB01D Image
- MLH400BSB01D PDF Datasheet
- MLH400BSB01D Download Datasheet
- MLH400BSB01D Datasheet
- MLH400BSB01D Stock
- Buy MLH400BSB01D
- Buy Honeywell Sensing and Productivity Solutions MLH400BSB01D
- Honeywell Sensing and Productivity Solutions MLH400BSB01D
- Honeywell Sensing and Productivity Solutions Supplier
- Honeywell Sensing and Productivity Solutions Distributor
- Honeywell Sensing and Productivity Solutions MLH400BSB01D
- HONEYWELL MLH400BSB01D
- Honeywell Sensing and Control EMEA MLH400BSB01D
- Honeywell Sensing and Productivity Solutions T&M MLH400BSB01D

Related Products

MLH350BST12E
Manufacturers: Honeywell Sensing and Productivity Solutions
Description: MLH ALL METAL PRESS SENSE -ATF
In stock: 966 pcs
RFQ

MLH400BSB01B
Manufacturers: Honeywell Sensing and Productivity Solutions
Description: MLH ALL METAL PRESS SENSE -ATF
In stock: 1107 pcs
RFQ

MLH400PSB06G
Manufacturers: Honeywell Sensing and Productivity Solutions
Description: SENSOR SEALED GAUGE 0-400 PSI
In stock: 5926 pcs
RFQ

MLH350BST07E
Manufacturers: Honeywell Sensing and Productivity Solutions
Description: MLH ALL METAL PRESS SENSE -ATF
In stock: 916 pcs
RFQ

MLH350PSB09A
Manufacturers: Honeywell Sensing and Productivity Solutions
Description: MLH ALL METAL PRESS SENSE -ATF
In stock: 3067 pcs
RFQ

MLH500BSG14D
Manufacturers: Honeywell Sensing and Productivity Solutions
Description: MLH ALL METAL PRESS SENSE -ATF
In stock: 853 pcs
RFQ

MLH500BSD08E
Manufacturers: Honeywell Sensing and Productivity Solutions
Description: SENSOR SEALED GAUGE 0-500 BAR
In stock: 5088 pcs
RFQ

MLH500BSB14A
Manufacturers: Honeywell Sensing and Productivity Solutions
Description: SENSOR SEALED GAUGE 0-500 BAR
In stock: 6569 pcs
RFQ

MLH500BSD14B
Manufacturers: Honeywell Sensing and Productivity Solutions
Description: SENSOR SEALED GAUGE 0-500 BAR
In stock: 1050 pcs
RFQ

MLH350BST13E
Manufacturers: Honeywell Sensing and Productivity Solutions
Description: MLH ALL METAL PRESS SENSE -ATF
In stock: 3234 pcs
RFQ

MLH400BSB01A
Manufacturers: Honeywell Sensing and Productivity Solutions
Description: MLH ALL METAL PRESS SENSE -ATF
In stock: 3106 pcs
RFQ

MLH500BSB14B
Manufacturers: Honeywell Sensing and Productivity Solutions
Description: SENSOR SEALED GAUGE 0-500 BAR
In stock: 897 pcs
RFQ

Copyright © 2020 Reliable Distributor of Electronic Components

E-mail: Info@infinity-electronic.com
Address: 17F, Gaylord Commercial Building, 114-118 Lockhart Road, Wan Chai, Hong Kong