Honeywell | Honeywell Sensing and Productivity Solutions

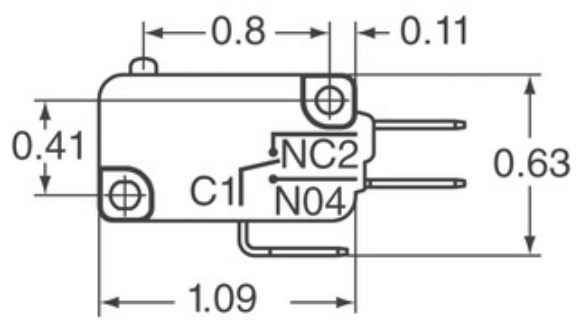

Image may be representation. See specifications for product details.

V15T26-CP200-K

Part Number:	V15T26-CP200-K
Manufacturer/Brand:	Honeywell Sensing and Productivity Solutions
Product description	SWITCH SNAP ACT SPST-NO 26A 250V
Datasheets:	1.V15T26-CP200-K.pdf 2.V15T26-CP200-K.pdf 3.V15T26-CP200-K.pdf
RoHs Status	Lead free / RoHS Compliant
Stock Condition	6837 pcs stock
Ship From	Hong Kong
Shipment Way	DHL/Fedex/TNT/UPS/EMS

REQUEST FOR QUOTATION

Specifications of V15T26-CP200-K

PART NUMBER	V15T26-CP200-K
MANUFACTURER	Honeywell Sensing and Productivity Solutions
DESCRIPTION	SWITCH SNAP ACT SPST-NO 26A 250V
LEAD FREE STATUS / ROHS STATUS	Lead free / RoHS Compliant
QUANTITY AVAILABLE	6837 pcs
DATA SHEET	1.V15T26-CP200-K.pdf 2.V15T26-CP200-K.pdf 3.V15T26-CP200-K.pdf
VOLTAGE RATING - AC	250V
TERMINATION STYLE	Quick Connect - 0.250" (6.3mm)
SWITCH FUNCTION	Off-Mom
SERIES	V15
RELEASE FORCE	50gf
PRETRAVEL	0.063" (1.6mm)
PACKAGING	Bulk
OVERTRAVEL	0.030" (0.76mm)
OPERATING TEMPERATURE	-25°C ~ 125°C
OPERATING POSITION	0.579" (14.7mm)
OPERATING FORCE	200gf
MOUNTING TYPE	Chassis Mount
MOISTURE SENSITIVITY LEVEL (MSL)	1 (Unlimited)
MECHANICAL LIFE	5,000,000 Cycles
LEAD FREE STATUS / ROHS STATUS	Lead free / RoHS Compliant
INGRESS PROTECTION	-
FEATURES	-
ELECTRICAL LIFE	25,000 Cycles
DIFFERENTIAL TRAVEL	0.016" (0.4mm)
CURRENT RATING	26A (AC)
CIRCUIT	SPST-NO
ACTUATOR TYPE	Round (Pin Plunger)

Related Tags

Honeywell Sensing and Productivity Solutions V15T26-CP200-K	V15T26-CP200-K Distributor	V15T26-CP200-K Supplier
V15T26-CP200-K Price	V15T26-CP200-K Pictures	V15T26-CP200-K Image
V15T26-CP200-K PDF Datasheet	V15T26-CP200-K Download Datasheet	V15T26-CP200-K Datasheet
V15T26-CP200-K Stock	Buy V15T26-CP200-K	Buy Honeywell Sensing and Productivity Solutions V15T26-CP200-K
Honeywell Sensing and Productivity Solutions V15T26-CP200-K	Honeywell Sensing and Productivity Solutions Supplier	Honeywell Sensing and Productivity Solutions Distributor
Honeywell Sensing and Productivity Solutions V15T26-CP200-K	HONEYWELL V15T26-CP200-K	Honeywell Sensing and Control EMEA V15T26-CP200-K
Honeywell Sensing and Productivity Solutions T&M V15T26-CP200-K		

Related Products

V15T22-SC200-01
Manufacturers: Honeywell Sensing and Productivity Solutions
Description: BASIC SWITCH V BASICS V15
In stock: 57059 pcs
RFQ

V15T26-CP300-01
Manufacturers: Honeywell Sensing and Productivity Solutions
Description: BASIC SWITCH V BASICS V15
In stock: 65018 pcs
RFQ

V15T26-CP300
Manufacturers: Honeywell Sensing and Productivity Solutions
Description: BASIC SWITCH V BASICS V15
In stock: 60753 pcs
RFQ

V15T22-MZ300A05-D
Manufacturers: Honeywell Sensing and Productivity Solutions
Description: BASIC SWITCH V BASICS V15
In stock: 45286 pcs
RFQ

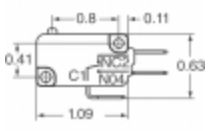

V15T26-CC200-K
Manufacturers: Honeywell Sensing and Productivity Solutions
Description: SWITCH SNAP ACT SPST-NC 26A 250V
In stock: 54976 pcs
RFQ

V15T26-CP400
Manufacturers: Honeywell Sensing and Productivity Solutions
Description: BASIC SWITCH V BASICS V15
In stock: 68252 pcs
RFQ

V15T26-CZ300-01
Manufacturers: Honeywell Sensing and Productivity Solutions
Description: BASIC SWITCH V BASICS V15
In stock: 60226 pcs
RFQ

V15T26-CZ300A04
Manufacturers: Honeywell Sensing and Productivity Solutions
Description: BASIC SWITCH V BASICS V15
In stock: 52334 pcs
RFQ

V15T26-CP200
Manufacturers: Honeywell Sensing and Productivity Solutions
Description: BASIC SWITCH V BASICS V15
In stock: 64471 pcs
RFQ

V15T26-CZ300-K
Manufacturers: Honeywell Sensing and Productivity Solutions
Description: SWITCH SNAP ACTION SPDT 26A 250V
In stock: 30432 pcs
RFQ

V15T22-MZ300A06-D
Manufacturers: Honeywell Sensing and Productivity Solutions
Description: BASIC SWITCH V BASICS V15
In stock: 47258 pcs
RFQ

V15T26-CC200-03
Manufacturers: Honeywell Sensing and Productivity Solutions
Description: BASIC SWITCH V BASICS V15
In stock: 6984 pcs
RFQ

Copyright © 2020 Reliable Distributor of Electronic Components

E-mail: Info@infinity-electronic.com
Address: 17F, Gaylord Commercial Building, 114-118 Lockhart Road, Wan Chai, Hong Kong