Honeywell | Honeywell Sensing and Productivity Solutions

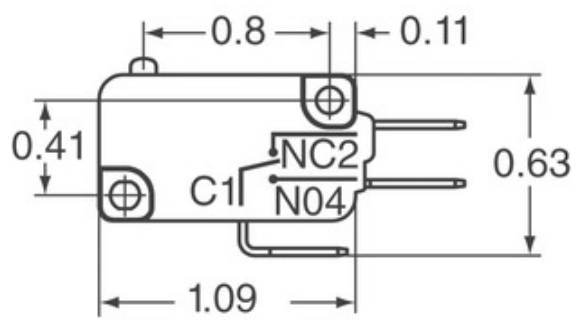

Image may be representation. See specifications for product details.

V15H22-CP400-K

Part Number:	V15H22-CP400-K
Manufacturer/Brand:	Honeywell Sensing and Productivity Solutions
Product description	SWITCH SNAP ACT SPST-NO 22A 250V
Datasheets:	1.V15H22-CP400-K.pdf 2.V15H22-CP400-K.pdf
RoHs Status	Lead free / RoHS Compliant
Stock Condition	3635 pcs stock
Ship From	Hong Kong
Shipment Way	DHL/Fedex/TNT/UPS/EMS

REQUEST FOR QUOTATION

Specifications of V15H22-CP400-K

PART NUMBER	V15H22-CP400-K
MANUFACTURER	Honeywell Sensing and Productivity Solutions
DESCRIPTION	SWITCH SNAP ACT SPST-NO 22A 250V
LEAD FREE STATUS / ROHS STATUS	Lead free / RoHS Compliant
QUANTITY AVAILABLE	3635 pcs
DATA SHEET	1.V15H22-CP400-K.pdf 2.V15H22-CP400-K.pdf
VOLTAGE RATING - AC	250V
TERMINATION STYLE	Quick Connect - 0.250" (6.3mm)
SWITCH FUNCTION	Off-Mom
SERIES	V15
RELEASE FORCE	100gf
PRETRAVEL	0.063" (1.6mm)
PACKAGING	Bulk
OVERTRAVEL	0.030" (0.76mm)
OPERATING TEMPERATURE	-25°C ~ 150°C
OPERATING POSITION	0.579" (14.7mm)
OPERATING FORCE	400gf
MOUNTING TYPE	Chassis Mount
MOISTURE SENSITIVITY LEVEL (MSL)	1 (Unlimited)
MECHANICAL LIFE	1,000,000 Cycles
LEAD FREE STATUS / ROHS STATUS	Lead free / RoHS Compliant
INGRESS PROTECTION	-
FEATURES	-
ELECTRICAL LIFE	10,000 Cycles
DIFFERENTIAL TRAVEL	0.016" (0.4mm)
CURRENT RATING	22A (AC)
CIRCUIT	SPST-NO
ACTUATOR TYPE	Round (Pin Plunger)

Related Tags

- Honeywell Sensing and Productivity Solutions V15H22-CP400-K
- V15H22-CP400-K Distributor
- V15H22-CP400-K Supplier
- V15H22-CP400-K Price
- V15H22-CP400-K Pictures
- V15H22-CP400-K Image
- V15H22-CP400-K PDF Datasheet
- V15H22-CP400-K Download Datasheet
- V15H22-CP400-K Datasheet
- V15H22-CP400-K Stock
- Buy V15H22-CP400-K
- Buy Honeywell Sensing and Productivity Solutions V15H22-CP400-K
- Honeywell Sensing and Productivity Solutions V15H22-CP400-K
- Honeywell Sensing and Productivity Solutions Supplier
- Honeywell Sensing and Productivity Solutions Distributor
- Honeywell Sensing and Productivity Solutions V15H22-CP400-K
- HONEYWELL V15H22-CP400-K
- Honeywell Sensing and Control EMEA V15H22-CP400-K
- Honeywell Sensing and Productivity Solutions T&M V15H22-CP400-K

Related Products

V15H22-CZ100-K
Manufacturers: Honeywell Sensing and Productivity Solutions
Description: SWITCH SNAP ACTION SPDT 22A 250V
In stock: 29035 pcs
RFQ

V15H22-CZ100A02
Manufacturers: Honeywell Sensing and Productivity Solutions
Description: BASIC SWITCH V BASICS V15
In stock: 55247 pcs
RFQ

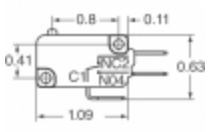

V15H22-CP400B03-K
Manufacturers: Honeywell Sensing and Productivity Solutions
Description: SWITCH SNAP ACT SPST-NO 22A 250V
In stock: 2846 pcs
RFQ

V15H16-EZ200B02-K
Manufacturers: Honeywell Sensing and Productivity Solutions
Description: SWITCH SNAP ACTION SPDT 16A 250V
In stock: 5513 pcs
RFQ

V15H16-EZ400-K
Manufacturers: Honeywell Sensing and Productivity Solutions
Description: SWITCH SNAP ACTION SPDT 16A 250V
In stock: 7055 pcs
RFQ

V15H16-EZ200A05
Manufacturers: Honeywell Sensing and Productivity Solutions
Description: BASIC SWITCH V BASICS V15
In stock: 45204 pcs
RFQ

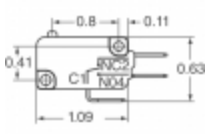

V15H22-CP200B03-K
Manufacturers: Honeywell Sensing and Productivity Solutions
Description: SWITCH SNAP ACT SPST-NO 22A 250V
In stock: 3991 pcs
RFQ

V15H22-CZ100A02-K
Manufacturers: Honeywell Sensing and Productivity Solutions
Description: SWITCH SNAP ACTION SPDT 22A 250V
In stock: 25096 pcs
RFQ

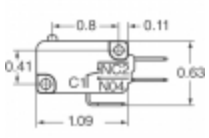

V15H22-CP100A02-K
Manufacturers: Honeywell Sensing and Productivity Solutions
Description: SWITCH SNAP ACT SPST-NO 22A 250V
In stock: 6566 pcs
RFQ

V15H16-EZ400A01-K
Manufacturers: Honeywell Sensing and Productivity Solutions
Description: SWITCH SNAP ACTION SPDT 16A 250V
In stock: 6431 pcs
RFQ

V15H22-CZ100
Manufacturers: Honeywell Sensing and Productivity Solutions
Description: BASIC SWITCH V BASICS V15
In stock: 57004 pcs
RFQ

V15H22-CZ100A03
Manufacturers: Honeywell Sensing and Productivity Solutions
Description: BASIC SWITCH V BASICS V15
In stock: 59116 pcs
RFQ

Copyright © 2020 Reliable Distributor of Electronic Components

E-mail: Info@infinity-electronic.com
Address: 17F, Gaylord Commercial Building, 114-118 Lockhart Road, Wan Chai, Hong Kong