TOSHIBA Leading Innovation >>> | Toshiba Semiconductor and Storage

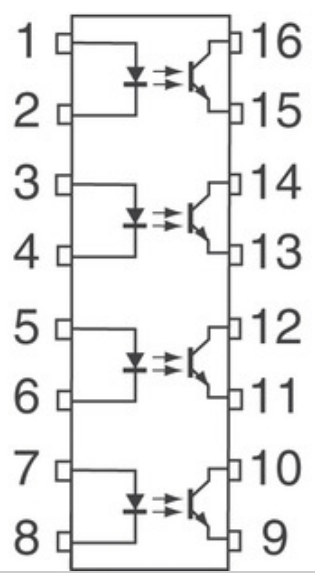

Image may be representation. See specifications for product details.

TLP281-4(TP,J,F)

Part Number:	TLP281-4(TP,J,F)
Manufacturer/Brand:	Toshiba Semiconductor and Storage
Product description	OPTOISO 2.5KV 4CH TRANS 16-SOP
Datasheets:	TLP281-4(TP,J,F).pdf
RoHs Status	Lead free / RoHS Compliant
Stock Condition	4269 pcs stock
Ship From	Hong Kong
Shipment Way	DHL/Fedex/TNT/UPS/EMS

REQUEST FOR QUOTATION

Specifications of TLP281-4(TP,J,F)

PART NUMBER	TLP281-4(TP,J,F)
MANUFACTURER	Toshiba Semiconductor and Storage
DESCRIPTION	OPTOISO 2.5KV 4CH TRANS 16-SOP
LEAD FREE STATUS / ROHS STATUS	Lead free / RoHS Compliant
QUANTITY AVAILABLE	4269 pcs
DATA SHEET	TLP281-4(TP,J,F).pdf
VOLTAGE - OUTPUT (MAX)	80V
VOLTAGE - ISOLATION	2500Vrms
VOLTAGE - FORWARD (VF) (TYP)	1.15V
VCE SATURATION (MAX)	400mV
TURN ON / TURN OFF TIME (TYP)	3µs, 3µs
SUPPLIER DEVICE PACKAGE	16-SOP
SERIES	-
RISE / FALL TIME (TYP)	2µs, 3µs
PACKAGING	Tape & Reel (TR)
PACKAGE / CASE	16-SOIC (0.173", 4.40mm Width)
OUTPUT TYPE	Transistor
OTHER NAMES	TLP281-4 (TP,J,F) TLP281-4JFTR TLP2814TPJF
OPERATING TEMPERATURE	-55°C ~ 100°C
NUMBER OF CHANNELS	4
MOUNTING TYPE	Surface Mount
MOISTURE SENSITIVITY LEVEL (MSL)	1 (Unlimited)
LEAD FREE STATUS / ROHS STATUS	Lead free / RoHS Compliant
INPUT TYPE	DC
DETAILED DESCRIPTION	Optoisolator Transistor Output 2500Vrms 4 Channel 16-SOP
CURRENT TRANSFER RATIO (MIN)	50% @ 5mA
CURRENT TRANSFER RATIO (MAX)	600% @ 5mA
CURRENT - OUTPUT / CHANNEL	50mA
CURRENT - DC FORWARD (IF) (MAX)	50mA

Related Tags

Toshiba Semiconductor and Storage TLP281-4(TP,J,F)	TLP281-4(TP,J,F) Distributor	TLP281-4(TP,J,F) Supplier
TLP281-4(TP,J,F) Price	TLP281-4(TP,J,F) Pictures	TLP281-4(TP,J,F) Image
TLP281-4(TP,J,F) PDF Datasheet	TLP281-4(TP,J,F) Download Datasheet	TLP281-4(TP,J,F) Datasheet
TLP281-4(TP,J,F) Stock	Buy TLP281-4(TP,J,F)	Buy Toshiba Semiconductor and Storage TLP281-4(TP,J,F)
Toshiba Semiconductor and Storage TLP281-4(TP,J,F)	Toshiba Semiconductor and Storage Supplier	Toshiba Semiconductor and Storage Distributor
Toshiba Semiconductor and Storage TLP281-4(TP,J,F)	Toshiba TLP281-4(TP,J,F)	

Related Products

TLP281-4(GB-TP,J,F
Manufacturers: Toshiba Semiconductor and Storage
Description: OPTOISO 2.5KV 4CH TRANS 16-SOP
In stock: 4208 pcs
RFQ

TLP285(TP,F)
Manufacturers: Toshiba Semiconductor and Storage
Description: OPTOISOLATOR 3.75KV TRANS 4-SOP
In stock: 4036 pcs
RFQ

TLP283(TP,F)
Manufacturers: Toshiba Semiconductor and Storage
Description: OPTOISOLATOR 2.5KV TRANS 4-SOP
In stock: 2974 pcs
RFQ

TLP28CA
Manufacturers: Littelfuse Inc.
Description: HI-REL TVS AXL HP TLP28 BI
In stock: 6214 pcs
RFQ

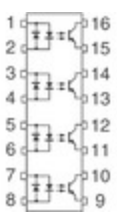

TLP280-4(GB-TP,J,F
Manufacturers: Toshiba Semiconductor and Storage
Description: OPTOISO 2.5KV 4CH TRANS 16-SOP
In stock: 5001 pcs
RFQ

TLP2770(E
Manufacturers: Toshiba Semiconductor and Storage
Description: OPTOISO 5KV TRI-STATE S06L
In stock: 68540 pcs
RFQ

TLP2770(TP,E
Manufacturers: Toshiba Semiconductor and Storage
Description: OPTOISO 5KV PSH-PULL/TOTEM S06L
In stock: 102922 pcs
RFQ

TLP290(BL-TP,SE
Manufacturers: Toshiba Semiconductor and Storage
Description: OPTOISOLATOR 3.75KV TRANS 4-SO
In stock: 196278 pcs
RFQ

TLP281(GB-TP,F)
Manufacturers: Toshiba Semiconductor and Storage
Description: OPTOISOLATOR 2.5KV TRANS 4-SOP
In stock: 5108 pcs
RFQ

TLP28A
Manufacturers: Littelfuse Inc.
Description: HI-REL TVS AXL HP TLP28 UNI
In stock: 6000 pcs
RFQ

TLP290(BLL-TP,E)
Manufacturers: Toshiba Semiconductor and Storage
Description: OPTOISOLATOR 3.75KV TRANS 4-SO
In stock: 120455 pcs
RFQ

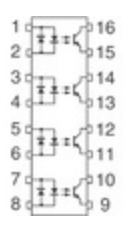

TLP280-4(GB,J,F)
Manufacturers: Toshiba Semiconductor and Storage
Description: OPTOISO 2.5KV 4CH TRANS 16-SOP
In stock: 4151 pcs
RFQ

Copyright © 2020 Reliable Distributor of Electronic Components

E-mail: Info@infinity-electronic.com
Address: 17F, Gaylord Commercial Building, 114-118 Lockhart Road, Wan Chai, Hong Kong