Honeywell | Honeywell Sensing and Productivity Solutions

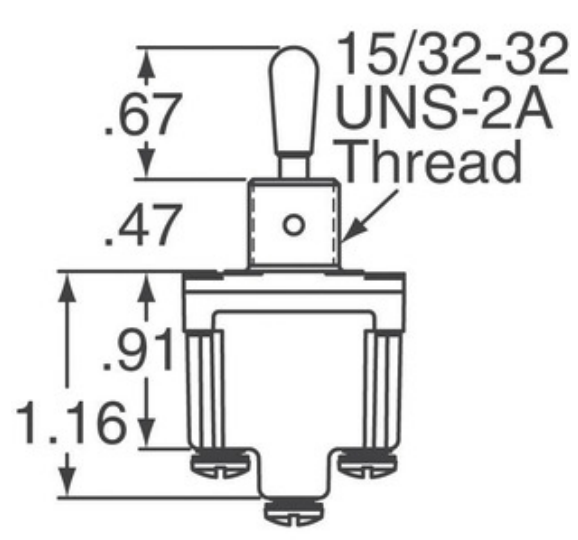

Image may be representation. See specifications for product details.

1NT887-7

Part Number:	1NT887-7
Manufacturer/Brand:	Honeywell Sensing and Productivity Solutions
Product description	SWITCH TOGGLE SPDT 10A 125V
Datasheets:	1.1NT887-7.pdf 2.1NT887-7.pdf 3.1NT887-7.pdf
RoHs Status	Lead free / RoHS Compliant
Stock Condition	6701 pcs stock
Ship From	Hong Kong
Shipment Way	DHL/Fedex/TNT/UPS/EMS

REQUEST FOR QUOTATION

Specifications of 1NT887-7

PART NUMBER	1NT887-7
MANUFACTURER	Honeywell Sensing and Productivity Solutions
DESCRIPTION	SWITCH TOGGLE SPDT 10A 125V
LEAD FREE STATUS / ROHS STATUS	Lead free / RoHS Compliant
QUANTITY AVAILABLE	6701 pcs
DATA SHEET	1.1NT887-7.pdf 2.1NT887-7.pdf 3.1NT887-7.pdf
VOLTAGE RATING - AC	125V
TERMINATION STYLE	Screw Terminal
SWITCH FUNCTION	Mom-Off-Mom
SERIES	NT
PANEL CUTOUT DIMENSIONS	Circular - 12.40mm Dia
PACKAGING	Bulk
OPERATING TEMPERATURE	-40°C ~ 71°C
MOUNTING TYPE	Panel Mount
MOISTURE SENSITIVITY LEVEL (MSL)	1 (Unlimited)
LEAD FREE STATUS / ROHS STATUS	Lead free / RoHS Compliant
INGRESS PROTECTION	Environment Proof
ILLUMINATION VOLTAGE (NOMINAL)	-
ILLUMINATION TYPE, COLOR	-
ILLUMINATION	Non-Illuminated
FEATURES	-
ELECTRICAL LIFE	-
DETAILED DESCRIPTION	Toggle Switch SPDT Panel Mount
CURRENT RATING	10A (AC)
CIRCUIT	SPDT
BUSHING THREAD	15/32-32
ACTUATOR TYPE	Standard Round
ACTUATOR MATERIAL	-
ACTUATOR LENGTH	17.02mm

Related Tags

Honeywell Sensing and Productivity Solutions 1NT887-7	1NT887-7 Distributor	1NT887-7 Supplier
1NT887-7 Price	1NT887-7 Pictures	1NT887-7 Image
1NT887-7 PDF Datasheet	1NT887-7 Download Datasheet	1NT887-7 Datasheet
1NT887-7 Stock	Buy 1NT887-7	Buy Honeywell Sensing and Productivity Solutions 1NT887-7
Honeywell Sensing and Productivity Solutions 1NT887-7	Honeywell Sensing and Productivity Solutions Supplier	Honeywell Sensing and Productivity Solutions Distributor
Honeywell Sensing and Productivity Solutions 1NT887-7	HONEYWELL 1NT887-7	Honeywell Sensing and Control EMEA 1NT887-7
Honeywell Sensing and Productivity Solutions T&M 1NT887-7		

Related Products

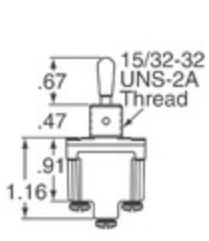

1NT231-7
Manufacturers: Honeywell Sensing and Productivity Solutions
Description: SWITCH TOGGLE SPDT 10A 125V
In stock: 5952 pcs
RFQ

1NT887-21K
Manufacturers: Honeywell Sensing and Productivity Solutions
Description: SWITCH TOGGLE SPST 15A 125V
In stock: 3538 pcs
RFQ

1NT20-7N
Manufacturers: Honeywell Sensing and Productivity Solutions
Description: SWITCH TOGGLE SPDT 10A 125V
In stock: 2808 pcs
RFQ

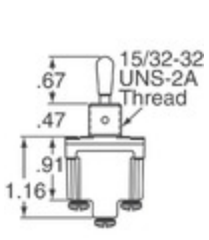

1NT887-3
Manufacturers: Honeywell Sensing and Productivity Solutions
Description: SWITCH TOGGLE SPDT 15A 125V
In stock: 4698 pcs
RFQ

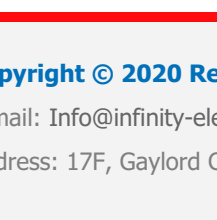

1NT91-3D
Manufacturers: Honeywell Sensing and Productivity Solutions
Description: SWITCH TOGGLE SPDT 15A 125V
In stock: 4929 pcs
RFQ

1NT887-2
Manufacturers: Honeywell Sensing and Productivity Solutions
Description: SWITCH TOGGLE SPST 15A 125V
In stock: 1672 pcs
RFQ

1NT91-3
Manufacturers: Honeywell Sensing and Productivity Solutions
Description: SWITCH TOGGLE SPDT 15A 125V
In stock: 5738 pcs
RFQ

1NT887-7E
Manufacturers: Honeywell Sensing and Productivity Solutions
Description: SWITCH TOGGLE SPDT 10A 125V
In stock: 5342 pcs
RFQ

1NT887-6
Manufacturers: Honeywell Sensing and Productivity Solutions
Description: SWITCH TOGGLE SPST-NO 10A 125V
In stock: 1590 pcs
RFQ

1NT91-2
Manufacturers: Honeywell Sensing and Productivity Solutions
Description: SWITCH TOGGLE SPST 15A 125V
In stock: 5800 pcs
RFQ

1NT91-1
Manufacturers: Honeywell Sensing and Productivity Solutions
Description: SWITCH TOGGLE SPDT 15A 125V
In stock: 5340 pcs
RFQ

1NT91-1E
Manufacturers: Honeywell Sensing and Productivity Solutions
Description: SWITCH TOGGLE SPDT 15A 125V
In stock: 6909 pcs
RFQ

Copyright © 2020 Reliable Distributor of Electronic Components

E-mail: Info@infinity-electronic.com
Address: 17F, Gaylord Commercial Building, 114-118 Lockhart Road, Wan Chai, Hong Kong