Diodes Incorporated

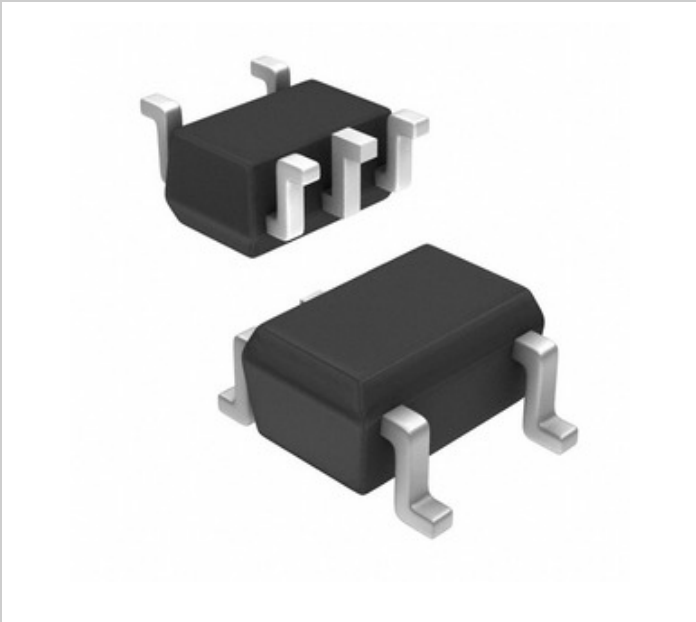

Image may be representation. See specifications for product details.

74AUP1G14SE-7

Part Number:	74AUP1G14SE-7
Manufacturer/Brand:	Diodes Incorporated
Product description	IC INVERTER SCHMITT 1CH SOT353
Datasheets:	74AUP1G14SE-7.pdf
RoHs Status	Lead free / RoHS Compliant
Stock Condition	562413 pcs stock
Ship From	Hong Kong
Shipment Way	DHL/Fedex/TNT/UPS/EMS

REQUEST FOR QUOTATION

Specifications of 74AUP1G14SE-7

PART NUMBER	74AUP1G14SE-7
MANUFACTURER	Diodes Incorporated
DESCRIPTION	IC INVERTER SCHMITT 1CH SOT353
LEAD FREE STATUS / ROHS STATUS	Lead free / RoHS Compliant
QUANTITY AVAILABLE	562413 pcs
DATA SHEET	74AUP1G14SE-7.pdf
VOLTAGE - SUPPLY	0.8 V ~ 3.6 V
SUPPLIER DEVICE PACKAGE	SOT-353
SERIES	74AUP
PACKAGING	Tape & Reel (TR)
PACKAGE / CASE	5-TSSOP, SC-70-5, SOT-353
OTHER NAMES	74AUP1G14SE-7DITR 74AUP1G14SE7
OPERATING TEMPERATURE	-40°C ~ 125°C
NUMBER OF INPUTS	1
NUMBER OF CIRCUITS	1
MOUNTING TYPE	Surface Mount
MOISTURE SENSITIVITY LEVEL (MSL)	1 (Unlimited)
MAX PROPAGATION DELAY @ V, MAX CL	6.1ns @ 3.3V, 30pF
LOGIC TYPE	Inverter
LOGIC LEVEL - LOW	0.15 V ~ 0.88 V
LOGIC LEVEL - HIGH	0.65 V ~ 2.32 V
LEAD FREE STATUS / ROHS STATUS	Lead free / RoHS Compliant
FEATURES	Schmitt Trigger
DETAILED DESCRIPTION	Inverter IC 1 Channel Schmitt Trigger SOT-353
CURRENT - QUIESCENT (MAX)	500nA
CURRENT - OUTPUT HIGH, LOW	4mA, 4mA
BASE PART NUMBER	74AUP1G14

Related Tags

Diodes Incorporated 74AUP1G14SE-7	74AUP1G14SE-7 Distributor	74AUP1G14SE-7 Supplier
74AUP1G14SE-7 Price	74AUP1G14SE-7 Pictures	74AUP1G14SE-7 Image
74AUP1G14SE-7 PDF Datasheet	74AUP1G14SE-7 Download Datasheet	74AUP1G14SE-7 Datasheet
74AUP1G14SE-7 Stock	Buy 74AUP1G14SE-7	Buy Diodes Incorporated 74AUP1G14SE-7
Diodes Incorporated 74AUP1G14SE-7	Diodes Incorporated Supplier	Diodes Incorporated Distributor
Diodes Incorporated 74AUP1G14SE-7	Diodes Inc 74AUP1G14SE-7	Pericom Semiconductor 74AUP1G14SE-7
Zetex Semiconductors (Diodes Incorporated) 74AUP1G14SE-7		

Related Products

74AUP1G14GX4Z
Manufacturers: Nexperia
Description: 74AUP1G14GX4/SOT1269/X2SON4
In stock: 226654 pcs
RFQ

74AUP1G14GX,125
Manufacturers: Nexperia
Description: IC INVERTER SCHMITT 1CH 5X2SON
In stock: 1110131 pcs
RFQ

74AUP1G14GN,132
Manufacturers: Nexperia
Description: IC INVERTER SCHMITT 1CH 6XSON
In stock: 478567 pcs
RFQ

74AUP1G157GN,132
Manufacturers: Nexperia
Description: IC MUX LP 2-INPUT 6XSON
In stock: 434919 pcs
RFQ

74AUP1G157GS,132
Manufacturers: Nexperia
Description: IC MUX LP 2-INPUT 6XSON
In stock: 423293 pcs
RFQ

74AUP1G14GW,125
Manufacturers: Nexperia
Description: IC INVERTER SCHMITT 1CH 5TSSOP
In stock: 259607 pcs
RFQ

74AUP1G157GF,132
Manufacturers: Nexperia
Description: IC MUX LP 2-INPUT 6-XSON
In stock: 261889 pcs
RFQ

74AUP1G157GM,132
Manufacturers: Nexperia
Description: IC MUX LP 2-INPUT 6-XSON
In stock: 558499 pcs
RFQ

74AUP1G14GS,132
Manufacturers: Nexperia
Description: IC INVERTER SCHMITT 1CH 6XSON
In stock: 988061 pcs
RFQ

74AUP1G14GVH
Manufacturers: Nexperia
Description: 74AUP1G14GV/SOT753/SO5
In stock: 199348 pcs
RFQ

74AUP1G157GM,115
Manufacturers: Nexperia
Description: IC MUX LP 2-INPUT 6-XSON
In stock: 627731 pcs
RFQ

74AUP1G157GW,125
Manufacturers: Nexperia
Description: IC MUX LOW POWER 2-INPUT 6TSSOP
In stock: 207940 pcs
RFQ

Copyright © 2020 Reliable Distributor of Electronic Components

E-mail: Info@infinity-electronic.com
Address: 17F, Gaylord Commercial Building, 114-118 Lockhart Road, Wan Chai, Hong Kong