Honeywell | Honeywell Sensing and Productivity Solutions

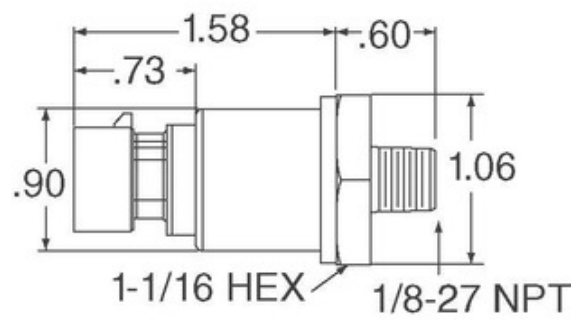

Image may be representation. See specifications for product details.

MLH025BGG02B

Part Number:	MLH025BGG02B
Manufacturer/Brand:	Honeywell Sensing and Productivity Solutions
Product description	MLH ALL METAL PRESS SENSE -ATF
Datasheets:	1.MLH025BGG02B.pdf 2.MLH025BGG02B.pdf
RoHs Status	Lead free / RoHS Compliant
Stock Condition	1049 pcs stock
Ship From	Hong Kong
Shipment Way	DHL/Fedex/TNT/UPS/EMS

REQUEST FOR QUOTATION

Specifications of MLH025BGG02B

PART NUMBER	MLH025BGG02B
MANUFACTURER	Honeywell Sensing and Productivity Solutions
DESCRIPTION	MLH ALL METAL PRESS SENSE -ATF
LEAD FREE STATUS / ROHS STATUS	Lead free / RoHS Compliant
QUANTITY AVAILABLE	1049 pcs
DATA SHEET	1.MLH025BGG02B.pdf 2.MLH025BGG02B.pdf
VOLTAGE - SUPPLY	9.5 V ~ 30 V
SUPPLIER DEVICE PACKAGE	-
SERIES	MLH
PRESSURE TYPE	Vented Gauge
PORT STYLE	Threaded
PORT SIZE	Male - M12 x 1.5
PACKAGE / CASE	Cylinder, Metal
OUTPUT TYPE	Analog Current
OUTPUT	4 mA ~ 20 mA
OPERATING TEMPERATURE	-40°C ~ 125°C
OPERATING PRESSURE	362.59 PSI (2500 kPa)
MOISTURE SENSITIVITY LEVEL (MSL)	1 (Unlimited)
MAXIMUM PRESSURE	1087.78 PSI (7500 kPa)
LEAD FREE STATUS / ROHS STATUS	Lead free / RoHS Compliant
FEATURES	Amplified Output, Temperature Compensated
DETAILED DESCRIPTION	Pressure Sensor 362.59 PSI (2500 kPa) Vented Gauge Male - M12 x 1.5 4 mA ~ 20 mA Cylinder, Metal
ACCURACY	±0.25%

Related Tags

- Honeywell Sensing and Productivity Solutions MLH025BGG02B
- MLH025BGG02B Distributor
- MLH025BGG02B Supplier
- MLH025BGG02B Price
- MLH025BGG02B Pictures
- MLH025BGG02B Image
- MLH025BGG02B PDF Datasheet
- MLH025BGG02B Download Datasheet
- MLH025BGG02B Datasheet
- MLH025BGG02B Stock
- Buy MLH025BGG02B
- Buy Honeywell Sensing and Productivity Solutions MLH025BGG02B
- Honeywell Sensing and Productivity Solutions MLH025BGG02B
- Honeywell Sensing and Productivity Solutions Supplier
- Honeywell Sensing and Productivity Solutions Distributor
- Honeywell Sensing and Productivity Solutions MLH025BGG02B
- HONEYWELL MLH025BGG02B
- Honeywell Sensing and Control EMEA MLH025BGG02B
- Honeywell Sensing and Productivity Solutions T&M MLH025BGG02B

Related Products

MLH01KPSP06C
Manufacturers: Honeywell Sensing and Productivity Solutions
Description: SENSOR SEALED GAUGE 0-1000 PSI
In stock: 4937 pcs
RFQ

MLH01KPST04A
Manufacturers: Honeywell Sensing and Productivity Solutions
Description: MLH ALL METAL PRESS SENSE -ATF
In stock: 862 pcs
RFQ

MLH025BGB20B
Manufacturers: Honeywell Sensing and Productivity Solutions
Description: MLH ALL METAL PRESS SENSE -ATF
In stock: 860 pcs
RFQ

MLH01KPSM06A
Manufacturers: Honeywell Sensing and Productivity Solutions
Description: SENSOR SEALED GAUGE 0-1000 PSI
In stock: 763 pcs
RFQ

MLH025BGG13B
Manufacturers: Honeywell Sensing and Productivity Solutions
Description: MLH ALL METAL PRESS SENSE -ATF
In stock: 6818 pcs
RFQ

MLH025BSD14A
Manufacturers: Honeywell Sensing and Productivity Solutions
Description: SENSOR SEALED GAUGE 0-25 BAR
In stock: 3422 pcs
RFQ

MLH025BGD14B
Manufacturers: Honeywell Sensing and Productivity Solutions
Description: SENSOR GAUGE 0-25 BAR
In stock: 944 pcs
RFQ

MLH025BSD14B
Manufacturers: Honeywell Sensing and Productivity Solutions
Description: SENSOR SEALED GAUGE 0-25 BAR
In stock: 931 pcs
RFQ

MLH025BGG08B
Manufacturers: Honeywell Sensing and Productivity Solutions
Description: SENSOR GAUGE 0-25 BAR
In stock: 999 pcs
RFQ

MLH025BGG20B
Manufacturers: Honeywell Sensing and Productivity Solutions
Description: MLH ALL METAL PRESS SENSE -ATF
In stock: 5780 pcs
RFQ

MLH025BSB01A
Manufacturers: Honeywell Sensing and Productivity Solutions
Description: MLH ALL METAL PRESS SENSE -ATF
In stock: 5206 pcs
RFQ

MLH020BST10A
Manufacturers: Honeywell Sensing and Productivity Solutions
Description: SENSOR SEALED GAUGE 0-20 BAR
In stock: 1098 pcs
RFQ

Copyright © 2020 Reliable Distributor of Electronic Components

E-mail: Info@infinity-electronic.com
Address: 17F, Gaylord Commercial Building, 114-118 Lockhart Road, Wan Chai, Hong Kong