Honeywell | Honeywell Sensing and Productivity Solutions

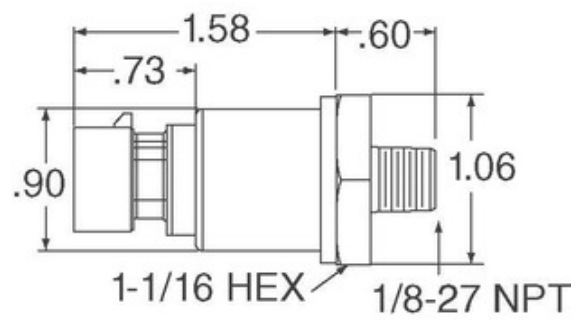

Image may be representation. See specifications for product details.

MLH05KPSB06G

Part Number:	MLH05KPSB06G
Manufacturer/Brand:	Honeywell Sensing and Productivity Solutions
Product description	SENSOR SEALED GAUGE 0-5000 PSI
Datasheets:	1.MLH05KPSB06G.pdf 2.MLH05KPSB06G.pdf
RoHs Status	Lead free / RoHS Compliant
Stock Condition	5774 pcs stock
Ship From	Hong Kong
Shipment Way	DHL/Fedex/TNT/UPS/EMS

REQUEST FOR QUOTATION

Specifications of MLH05KPSB06G

PART NUMBER	MLH05KPSB06G
MANUFACTURER	Honeywell Sensing and Productivity Solutions
DESCRIPTION	SENSOR SEALED GAUGE 0-5000 PSI
LEAD FREE STATUS / ROHS STATUS	Lead free / RoHS Compliant
QUANTITY AVAILABLE	5774 pcs
DATA SHEET	1.MLH05KPSB06G.pdf 2.MLH05KPSB06G.pdf
VOLTAGE - SUPPLY	8 V ~ 30 V
TERMINATION STYLE	Packard Metripak 150
SUPPLIER DEVICE PACKAGE	-
SERIES	MLH
PRESSURE TYPE	Sealed Gauge
PORT STYLE	Threaded
PORT SIZE	Male - 1/8" (3.18mm) NPT
PACKAGE / CASE	Cylinder, Metal
OUTPUT TYPE	Analog Voltage
OUTPUT	1 V ~ 5 V
OPERATING TEMPERATURE	-40°C ~ 125°C
OPERATING PRESSURE	5000 PSI (34473.79 kPa)
MOISTURE SENSITIVITY LEVEL (MSL)	1 (Unlimited)
MAXIMUM PRESSURE	7500 PSI (51710.68 kPa)
LEAD FREE STATUS / ROHS STATUS	Lead free / RoHS Compliant
FEATURES	Amplified Output, Temperature Compensated
DETAILED DESCRIPTION	Pressure Sensor 5000 PSI (34473.79 kPa) Sealed Gauge Male - 1/8" (3.18mm) NPT 1 V ~ 5 V Cylinder, Metal
ACCURACY	±0.25%

Related Tags

- Honeywell Sensing and Productivity Solutions MLH05KPSB06G
- MLH05KPSB06G Distributor
- MLH05KPSB06G Supplier
- MLH05KPSB06G Price
- MLH05KPSB06G Pictures
- MLH05KPSB06G Image
- MLH05KPSB06G PDF Datasheet
- MLH05KPSB06G Download Datasheet
- MLH05KPSB06G Datasheet
- MLH05KPSB06G Stock
- Buy MLH05KPSB06G
- Buy Honeywell Sensing and Productivity Solutions MLH05KPSB06G
- Honeywell Sensing and Productivity Solutions MLH05KPSB06G
- Honeywell Sensing and Productivity Solutions Supplier
- Honeywell Sensing and Productivity Solutions Distributor
- Honeywell Sensing and Productivity Solutions MLH05KPSB06G
- HONEYWELL MLH05KPSB06G
- Honeywell Sensing and Control EMEA MLH05KPSB06G
- Honeywell Sensing and Productivity Solutions T&M MLH05KPSB06G

Related Products

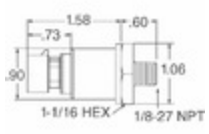

MLH05KPSB06B
Manufacturers: Honeywell Sensing and Productivity Solutions
Description: SENSOR SEALED GAUGE 0-5000 PSI
In stock: 1096 pcs
RFQ

MLH05KPGB01B
Manufacturers: Honeywell Sensing and Productivity Solutions
Description: SENSOR AMP 5000PSI 4-20MA OUT
In stock: 801 pcs
RFQ

MLH05KPSB01B
Manufacturers: Honeywell Sensing and Productivity Solutions
Description: SENSOR AMP 5000PSI 4-20MA OUT
In stock: 913 pcs
RFQ

MLH05KPSL04A
Manufacturers: Honeywell Sensing and Productivity Solutions
Description: SENSOR SEALED GAUGE 0-5000 PSI
In stock: 928 pcs
RFQ

MLH05KPSB01A
Manufacturers: Honeywell Sensing and Productivity Solutions
Description: SENSOR AMP 5000PSI .5-4.5VDC OUT
In stock: 729 pcs
RFQ

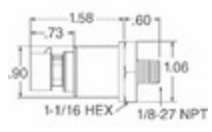

MLH05KPSD13B
Manufacturers: Honeywell Sensing and Productivity Solutions
Description: MLH ALL METAL PRESS SENSE -ATF
In stock: 1028 pcs
RFQ

MLH05KPSB10A
Manufacturers: Honeywell Sensing and Productivity Solutions
Description: MLH ALL METAL PRESS SENSE -ATF
In stock: 990 pcs
RFQ

MLH05KPSD01A
Manufacturers: Honeywell Sensing and Productivity Solutions
Description: MLH ALL METAL PRESS SENSE -ATF
In stock: 4388 pcs
RFQ

MLH05KPSB01G
Manufacturers: Honeywell Sensing and Productivity Solutions
Description: SENSOR SEALED GAUGE 0-5000 PSI
In stock: 987 pcs
RFQ

MLH05KPSD14B
Manufacturers: Honeywell Sensing and Productivity Solutions
Description: SENSOR SEALED GAUGE 0-5000 PSI
In stock: 1030 pcs
RFQ

MLH05KPSB06A
Manufacturers: Honeywell Sensing and Productivity Solutions
Description: SENSOR SEALED GAUGE 0-5000 PSI
In stock: 963 pcs
RFQ

MLH05KPSL01B
Manufacturers: Honeywell Sensing and Productivity Solutions
Description: MLH ALL METAL PRESS SENSE -ATF
In stock: 994 pcs
RFQ

Copyright © 2020 Reliable Distributor of Electronic Components

E-mail: Info@infinity-electronic.com
Address: 17F, Gaylord Commercial Building, 114-118 Lockhart Road, Wan Chai, Hong Kong