Honeywell | Honeywell Sensing and Productivity Solutions

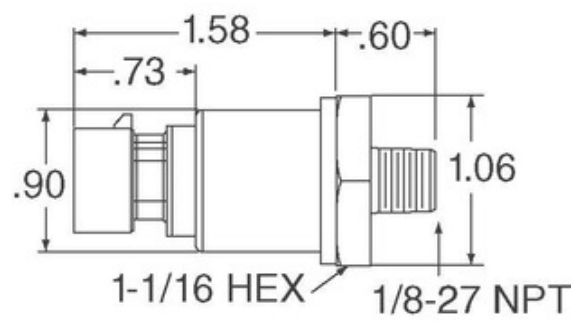

Image may be representation. See specifications for product details.

MLH01KPGB01B

Part Number:	MLH01KPGB01B
Manufacturer/Brand:	Honeywell Sensing and Productivity Solutions
Product description	MLH ALL METAL PRESS SENSE -ATF
Datasheets:	1.MLH01KPGB01B.pdf 2.MLH01KPGB01B.pdf
RoHs Status	Lead free / RoHS Compliant
Stock Condition	6596 pcs stock
Ship From	Hong Kong
Shipment Way	DHL/Fedex/TNT/UPS/EMS

REQUEST FOR QUOTATION

Specifications of MLH01KPGB01B

PART NUMBER	MLH01KPGB01B
MANUFACTURER	Honeywell Sensing and Productivity Solutions
DESCRIPTION	MLH ALL METAL PRESS SENSE -ATF
LEAD FREE STATUS / ROHS STATUS	Lead free / RoHS Compliant
QUANTITY AVAILABLE	6596 pcs
DATA SHEET	1.MLH01KPGB01B.pdf 2.MLH01KPGB01B.pdf
VOLTAGE - SUPPLY	9.5 V ~ 30 V
SUPPLIER DEVICE PACKAGE	-
SERIES	MLH
PRESSURE TYPE	Vented Gauge
PORT STYLE	Threaded
PORT SIZE	Male - 1/4" (6.35mm) NPT
PACKAGE / CASE	Cylinder, Metal
OUTPUT TYPE	Analog Current
OUTPUT	4 mA ~ 20 mA
OPERATING TEMPERATURE	-40°C ~ 125°C
OPERATING PRESSURE	1000 PSI (6894.76 kPa)
MOISTURE SENSITIVITY LEVEL (MSL)	1 (Unlimited)
MAXIMUM PRESSURE	2000 PSI (13789.51 kPa)
LEAD FREE STATUS / ROHS STATUS	Lead free / RoHS Compliant
FEATURES	Amplified Output, Temperature Compensated
DETAILED DESCRIPTION	Pressure Sensor 1000 PSI (6894.76 kPa) Vented Gauge Male - 1/4" (6.35mm) NPT 4 mA ~ 20 mA Cylinder, Metal
ACCURACY	±0.25%

Related Tags

- Honeywell Sensing and Productivity Solutions MLH01KPGB01B
- MLH01KPGB01B Distributor
- MLH01KPGB01B Supplier
- MLH01KPGB01B Price
- MLH01KPGB01B Pictures
- MLH01KPGB01B Image
- MLH01KPGB01B PDF Datasheet
- MLH01KPGB01B Download Datasheet
- MLH01KPGB01B Datasheet
- MLH01KPGB01B Stock
- Buy MLH01KPGB01B
- Buy Honeywell Sensing and Productivity Solutions MLH01KPGB01B
- Honeywell Sensing and Productivity Solutions MLH01KPGB01B
- Honeywell Sensing and Productivity Solutions Supplier
- Honeywell Sensing and Productivity Solutions Distributor
- Honeywell Sensing and Productivity Solutions MLH01KPGB01B
- HONEYWELL MLH01KPGB01B
- Honeywell Sensing and Control EMEA MLH01KPGB01B
- Honeywell Sensing and Productivity Solutions T&M MLH01KPGB01B

Related Products

MLH016BSH14A
Manufacturers: Honeywell Sensing and Productivity Solutions
Description: MLH ALL METAL PRESS SENSE -ATF
In stock: 1099 pcs
RFQ

MLH016BSG17B
Manufacturers: Honeywell Sensing and Productivity Solutions
Description: MLH ALL METAL PRESS SENSE -ATF
In stock: 6019 pcs
RFQ

MLH01KPSB06E
Manufacturers: Honeywell Sensing and Productivity Solutions
Description: MLH ALL METAL PRESS SENSE -ATF
In stock: 843 pcs
RFQ

MLH01KPSB06B
Manufacturers: Honeywell Sensing and Productivity Solutions
Description: SENSOR AMP 1000PSI 4-20MA OUT
In stock: 782 pcs
RFQ

MLH01KPGB06C
Manufacturers: Honeywell Sensing and Productivity Solutions
Description: MLH ALL METAL PRESS SENSE -ATF
In stock: 5700 pcs
RFQ

MLH01KPSB06A
Manufacturers: Honeywell Sensing and Productivity Solutions
Description: SENSOR AMP 1000PSI .5-4.5VDC OUT
In stock: 950 pcs
RFQ

MLH016BSM14B
Manufacturers: Honeywell Sensing and Productivity Solutions
Description: MLH ALL METAL PRESS SENSE -ATF
In stock: 951 pcs
RFQ

MLH017BSB01A
Manufacturers: Honeywell Sensing and Productivity Solutions
Description: SENSOR SEALED GAUGE 0-17 BAR
In stock: 7005 pcs
RFQ

MLH016BSM01B
Manufacturers: Honeywell Sensing and Productivity Solutions
Description: SENSOR SEALED GAUGE 0-16 BAR
In stock: 6107 pcs
RFQ

MLH01KPSB01A
Manufacturers: Honeywell Sensing and Productivity Solutions
Description: SENSOR AMP 1000PSI .5-4.5VDC
In stock: 796 pcs
RFQ

MLH016BSM05G
Manufacturers: Honeywell Sensing and Productivity Solutions
Description: MLH ALL METAL PRESS SENSE -ATF
In stock: 6872 pcs
RFQ

MLH01KPSB01B
Manufacturers: Honeywell Sensing and Productivity Solutions
Description: SENSOR AMP 1000PSI 4-20MA OUT
In stock: 895 pcs
RFQ

Copyright © 2020 Reliable Distributor of Electronic Components

E-mail: Info@infinity-electronic.com
Address: 17F, Gaylord Commercial Building, 114-118 Lockhart Road, Wan Chai, Hong Kong