Panasonic | Panasonic

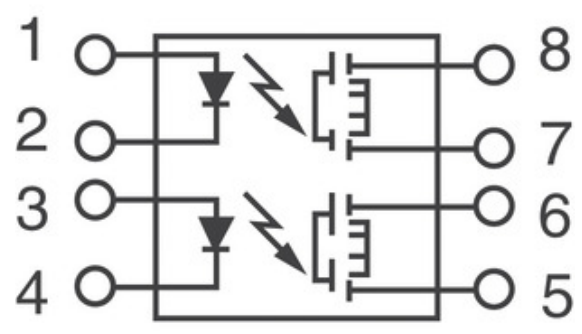

Image may be representation. See specifications for product details.

AQW414EH

Part Number:	AQW414EH
Manufacturer/Brand:	Panasonic
Product description	SSR RELAY SPST-NC 100MA 0-400V
Datasheets:	1.AQW414EH.pdf 2.AQW414EH.pdf
RoHs Status	Lead free / RoHS Compliant
Stock Condition	11135 pcs stock
Ship From	Hong Kong
Shipment Way	DHL/Fedex/TNT/UPS/EMS

REQUEST FOR QUOTATION

Specifications of AQW414EH

PART NUMBER	AQW414EH
MANUFACTURER	Panasonic
DESCRIPTION	SSR RELAY SPST-NC 100MA 0-400V
LEAD FREE STATUS / ROHS STATUS	Lead free / RoHS Compliant
QUANTITY AVAILABLE	11135 pcs
DATA SHEET	1.AQW414EH.pdf 2.AQW414EH.pdf
VOLTAGE - LOAD	0V ~ 400V
VOLTAGE - INPUT	1.14VDC
TERMINATION STYLE	PC Pin
SUPPLIER DEVICE PACKAGE	8-DIP
SERIES	PhotoMOS™ AQW
PACKAGING	Tube
PACKAGE / CASE	8-DIP (0.300", 7.62mm)
OUTPUT TYPE	AC, DC
OTHER NAMES	255-1350 255-1350-5 255-1350-ND
ON-STATE RESISTANCE (MAX)	35 Ohms
MOUNTING TYPE	Through Hole
MOISTURE SENSITIVITY LEVEL (MSL)	1 (Unlimited)
LOAD CURRENT	100mA
LEAD FREE STATUS / ROHS STATUS	Lead free / RoHS Compliant
DETAILED DESCRIPTION	Solid State Relay SPST-NC (1 Form B) x 2 8-DIP (0.300", 7.62mm)
CIRCUIT	SPST-NC (1 Form B) x 2

Related Tags

Panasonic AQW414EH	AQW414EH Distributor	AQW414EH Supplier
AQW414EH Price	AQW414EH Pictures	AQW414EH Image
AQW414EH PDF Datasheet	AQW414EH Download Datasheet	AQW414EH Datasheet
AQW414EH Stock	Buy AQW414EH	Buy Panasonic AQW414EH
Panasonic AQW414EH	Panasonic Supplier	Panasonic Distributor
Panasonic AQW414EH	Panasonic - Consumer Division AQW414EH	Panasonic - Consumer Electronics Corp. AQW414EH
Panasonic Battery Group AQW414EH	Panasonic Electric Works - ACSD AQW414EH	Panasonic Electronic Components - Semiconductor Pr AQW414EH
Panasonic - ATG AQW414EH	Panasonic - BSG AQW414EH	Panasonic - DTG AQW414EH
Panasonic Electric Works AQW414EH	Panasonic Electronic Components AQW414EH	Panasonic Industrial Automation Sales AQW414EH
Panasonic Semiconductor AQW414EH		

Related Products

AQW414SX
Manufacturers: Panasonic
Description: SSR RELAY SPST-NC 80MA 0-400V
In stock: 16281 pcs
RFQ

AQW414EHA
Manufacturers: Panasonic
Description: SSR RELAY SPST-NC 100MA 0-400V
In stock: 12011 pcs
RFQ

AQW414AX
Manufacturers: Panasonic
Description: SSR RELAY SPST-NC 100MA 0-400V
In stock: 25944 pcs
RFQ

AQW414A
Manufacturers: Panasonic
Description: SSR RELAY SPST-NC 100MA 0-400V
In stock: 8402 pcs
RFQ

AQW414T2SX
Manufacturers: Panasonic
Description: PHOTOMOSMOSFET RELAY 2 OPT
In stock: 17937 pcs
RFQ

AQW410EHA
Manufacturers: Panasonic
Description: SSR RELAY SPST-NC 100MA 0-350V
In stock: 18652 pcs
RFQ

AQW414T2S
Manufacturers: Panasonic
Description: PHOTOMOS MOSFET RELAY W/ 2 OPT
In stock: 11309 pcs
RFQ

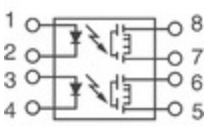

AQW414
Manufacturers: Panasonic
Description: SSR RELAY SPST-NC 100MA 0-400V
In stock: 8290 pcs
RFQ

AQW410S
Manufacturers: Panasonic
Description: SSR RELAY SPST-NC 100MA 0-350V
In stock: 17845 pcs
RFQ

AQW414AZ
Manufacturers: Panasonic
Description: SSR RELAY SPST-NC 100MA 0-400V
In stock: 22591 pcs
RFQ

AQW414EHAX
Manufacturers: Panasonic
Description: SSR RELAY DPST-NC 100MA 0-400V
In stock: 30741 pcs
RFQ

AQW414S
Manufacturers: Panasonic
Description: SSR RELAY SPST-NC 80MA 0-400V
In stock: 13010 pcs
RFQ

Copyright © 2020 Reliable Distributor of Electronic Components

E-mail: Info@infinity-electronic.com
Address: 17F, Gaylord Commercial Building, 114-118 Lockhart Road, Wan Chai, Hong Kong