Honeywell | Honeywell Sensing and Productivity Solutions

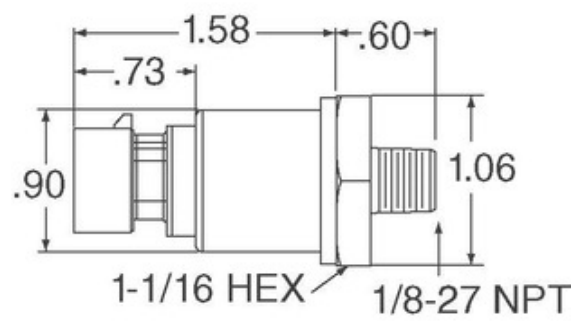

Image may be representation. See specifications for product details.

MLH03KPSB10A

Part Number:	MLH03KPSB10A
Manufacturer/Brand:	Honeywell Sensing and Productivity Solutions
Product description	SENSOR SEALED GAUGE 0-3000 PSI
Datasheets:	1.MLH03KPSB10A.pdf 2.MLH03KPSB10A.pdf
RoHs Status	Lead free / RoHS Compliant
Stock Condition	1168 pcs stock
Ship From	Hong Kong
Shipment Way	DHL/Fedex/TNT/UPS/EMS

REQUEST FOR QUOTATION

Specifications of MLH03KPSB10A

PART NUMBER	MLH03KPSB10A
MANUFACTURER	Honeywell Sensing and Productivity Solutions
DESCRIPTION	SENSOR SEALED GAUGE 0-3000 PSI
LEAD FREE STATUS / ROHS STATUS	Lead free / RoHS Compliant
QUANTITY AVAILABLE	1168 pcs
DATA SHEET	1.MLH03KPSB10A.pdf 2.MLH03KPSB10A.pdf
VOLTAGE - SUPPLY	5 V ~ 6 V
TERMINATION STYLE	Packard Metripak 150
SUPPLIER DEVICE PACKAGE	-
SERIES	MLH
PRESSURE TYPE	Sealed Gauge
PORT STYLE	Threaded
PORT SIZE	Male - 7/16" (11.11mm) UNF
PACKAGE / CASE	Cylinder, Metal
OUTPUT TYPE	Analog Voltage
OUTPUT	0.5 V ~ 4.5 V
OPERATING TEMPERATURE	-40°C ~ 125°C
OPERATING PRESSURE	3000 PSI (20684.27 kPa)
MOISTURE SENSITIVITY LEVEL (MSL)	1 (Unlimited)
MAXIMUM PRESSURE	6000 PSI (41368.54 kPa)
LEAD FREE STATUS / ROHS STATUS	Lead free / RoHS Compliant
FEATURES	Amplified Output, Temperature Compensated
DETAILED DESCRIPTION	Pressure Sensor 3000 PSI (20684.27 kPa) Sealed Gauge Male - 7/16" (11.11mm) UNF 0.5 V ~ 4.5 V Cylinder, Metal
ACCURACY	±0.25%

Related Tags

Honeywell Sensing and Productivity Solutions MLH03KPSB10A	MLH03KPSB10A Distributor	MLH03KPSB10A Supplier
MLH03KPSB10A Price	MLH03KPSB10A Pictures	MLH03KPSB10A Image
MLH03KPSB10A PDF Datasheet	MLH03KPSB10A Download Datasheet	MLH03KPSB10A Datasheet
MLH03KPSB10A Stock	Buy MLH03KPSB10A	Buy Honeywell Sensing and Productivity Solutions MLH03KPSB10A
Honeywell Sensing and Productivity Solutions MLH03KPSB10A	Honeywell Sensing and Productivity Solutions Supplier	Honeywell Sensing and Productivity Solutions Distributor
Honeywell Sensing and Productivity Solutions MLH03KPSB10A	HONEYWELL MLH03KPSB10A	Honeywell Sensing and Control EMEA MLH03KPSB10A
Honeywell Sensing and Productivity Solutions T&M MLH03KPSB10A		

Related Products

MLH03KPSB01G
Manufacturers: Honeywell Sensing and Productivity Solutions
Description: SENSOR AMP 3000PSI 1-5VDC OUT
In stock: 786 pcs
RFQ

MLH03KPSL01B
Manufacturers: Honeywell Sensing and Productivity Solutions
Description: SENSOR AMP 3000PSI 4-20MA OUT
In stock: 770 pcs
RFQ

MLH03KPSL01G
Manufacturers: Honeywell Sensing and Productivity Solutions
Description: SENSOR AMP 3000PSI 1-5VDC OUT
In stock: 609 pcs
RFQ

MLH03KPSB01B
Manufacturers: Honeywell Sensing and Productivity Solutions
Description: SENSOR AMP 3000PSI 4-20MA OUT
In stock: 762 pcs
RFQ

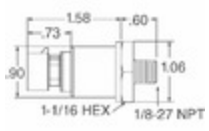

MLH03KPSB01C
Manufacturers: Honeywell Sensing and Productivity Solutions
Description: MLH ALL METAL PRESS SENSE -ATF
In stock: 5884 pcs
RFQ

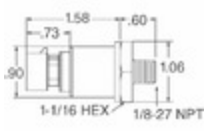

MLH03KPSB17E
Manufacturers: Honeywell Sensing and Productivity Solutions
Description: MLH ALL METAL PRESS SENSE -ATF
In stock: 4674 pcs
RFQ

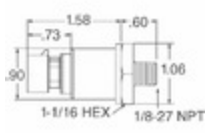

MLH03KPSB12A
Manufacturers: Honeywell Sensing and Productivity Solutions
Description: SENSOR SEALED GAUGE 0-3000 PSI
In stock: 3412 pcs
RFQ

MLH03KPSB06A
Manufacturers: Honeywell Sensing and Productivity Solutions
Description: SENSOR AMP 3000PSI .5-4.5VDC OUT
In stock: 980 pcs
RFQ

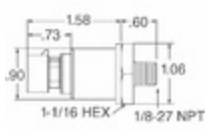

MLH03KPSB06G
Manufacturers: Honeywell Sensing and Productivity Solutions
Description: SENSOR SEALED GAUGE 0-3000 PSI
In stock: 850 pcs
RFQ

MLH03KPSB06B
Manufacturers: Honeywell Sensing and Productivity Solutions
Description: SENSOR AMP 3000PSI 4-20MA OUT
In stock: 1193 pcs
RFQ

MLH03KPSB10B
Manufacturers: Honeywell Sensing and Productivity Solutions
Description: SENSOR AMP 3000PSI 4-20MA OUT
In stock: 2930 pcs
RFQ

MLH03KPSL01A
Manufacturers: Honeywell Sensing and Productivity Solutions
Description: SENSOR AMP 3000PSI .5-4.5VDC OUT
In stock: 722 pcs
RFQ

Copyright © 2020 Reliable Distributor of Electronic Components

E-mail: Info@infinity-electronic.com
Address: 17F, Gaylord Commercial Building, 114-118 Lockhart Road, Wan Chai, Hong Kong