Panasonic | Panasonic

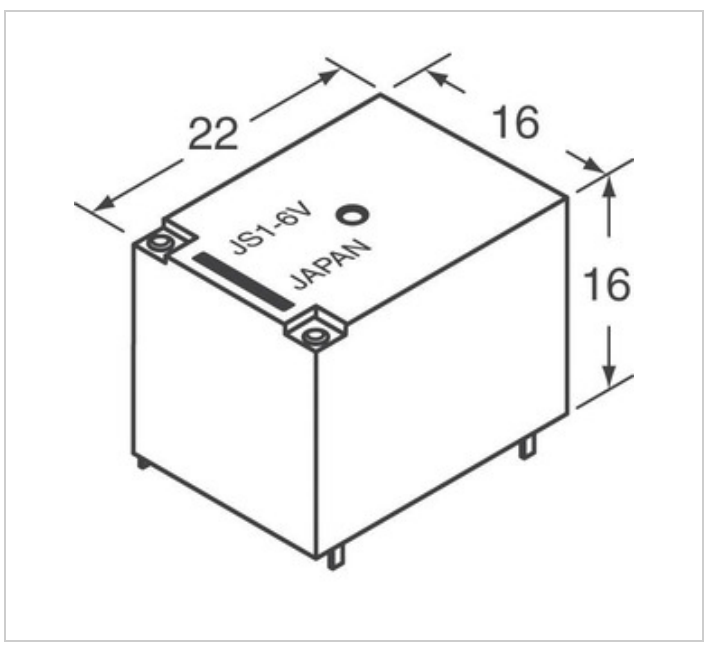


Image may be representation. See specifications for product details.

# JS1A-B-18V-F

| | |
|---|---|
| Part Number: | JS1A-B-18V-F |
| Manufacturer/Brand: | Panasonic |
| Product description | JS RELAY 1 FORM A 18V |
| Datasheets: | JS1A-B-18V-F.pdf |
| RoHs Status | Lead free / RoHS Compliant |
| Stock Condition | 82375 pcs stock |
| Ship From | Hong Kong |
| Shipment Way | DHL/Fedex/TNT/UPS/EMS |

**REQUEST FOR QUOTATION**

## Specifications of JS1A-B-18V-F

| | |
|---|---|
| PART NUMBER | JS1A-B-18V-F |
| MANUFACTURER | Panasonic |
| DESCRIPTION | JS RELAY 1 FORM A 18V |
| LEAD FREE STATUS / ROHS STATUS | Lead free / RoHS Compliant |
| QUANTITY AVAILABLE | 82375 pcs |
| DATA SHEET | JS1A-B-18V-F.pdf |
| SERIES | * |
| MOISTURE SENSITIVITY LEVEL (MSL) | 1 (Unlimited) |
| LEAD FREE STATUS / ROHS STATUS | Lead free / RoHS Compliant |
| DETAILED DESCRIPTION | Relay Coil |

## Related Tags

| | | |
|---|---|---|
| Panasonic JS1A-B-18V-F | JS1A-B-18V-F Distributor | JS1A-B-18V-F Supplier |
| JS1A-B-18V-F Price | JS1A-B-18V-F Pictures | JS1A-B-18V-F Image |
| JS1A-B-18V-F PDF Datasheet | JS1A-B-18V-F Download Datasheet | JS1A-B-18V-F Datasheet |
| JS1A-B-18V-F Stock | Buy JS1A-B-18V-F | Buy Panasonic JS1A-B-18V-F |
| Panasonic JS1A-B-18V-F | Panasonic Supplier | Panasonic Distributor |
| Panasonic JS1A-B-18V-F | Panasonic - Consumer Division JS1A-B-18V-F | Panasonic - Consumer Electronics Corp. JS1A-B-18V-F |
| Panasonic Battery Group JS1A-B-18V-F | Panasonic Electric Works - ACSD JS1A-B-18V-F | Panasonic Electronic Components - Semiconductor Pr JS1A-B-18V-F |
| Panasonic - ATG JS1A-B-18V-F | Panasonic - BSG JS1A-B-18V-F | Panasonic - DTG JS1A-B-18V-F |
| Panasonic Electric Works JS1A-B-18V-F | Panasonic Electronic Components JS1A-B-18V-F | Panasonic Industrial Automation Sales JS1A-B-18V-F |
| Panasonic Semiconductor JS1A-B-18V-F | | |

## Related Products

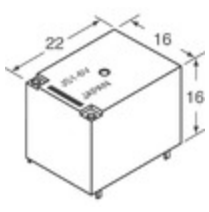

**JS1A-B-48V-F**
Manufacturers: Panasonic
Description: RELAY GEN PURPOSE SPST 10A 48V
In stock: 46958 pcs
RFQ

**JS1A-B-18V**
Manufacturers: Panasonic
Description: RELAY GEN PURPOSE SPST 10A 18V
In stock: 4901 pcs
RFQ

**JS1A-9V**
Manufacturers: Panasonic
Description: RELAY GEN PURPOSE SPST 10A 9V
In stock: 5769 pcs
RFQ

**JS1A-9V-F**
Manufacturers: Panasonic
Description: RELAY GEN PURPOSE SPST 10A 9V
In stock: 63051 pcs
RFQ

**JS1A-B-12V**
Manufacturers: Panasonic
Description: RELAY GEN PURPOSE SPST 10A 12V
In stock: 5670 pcs
RFQ

**JS1A-B-24V-F**
Manufacturers: Panasonic
Description: RELAY GEN PURPOSE SPST 10A 24V
In stock: 62910 pcs
RFQ

**JS1A-B-48V**
Manufacturers: Panasonic
Description: RELAY GEN PURPOSE SPST 10A 48V
In stock: 5163 pcs
RFQ

**JS1A-B-24V**
Manufacturers: Panasonic
Description: RELAY GEN PURPOSE SPST 10A 24V
In stock: 3696 pcs
RFQ

**JS1A-B-5V**
Manufacturers: Panasonic
Description: RELAY GEN PURPOSE SPST 10A 5V
In stock: 7077 pcs
RFQ

**JS1A-B-12V-F**
Manufacturers: Panasonic
Description: RELAY GEN PURPOSE SPST 10A 12V
In stock: 55261 pcs
RFQ

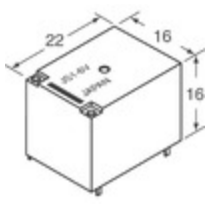

**JS1A-6V-F**
Manufacturers: Panasonic
Description: RELAY GEN PURPOSE SPST 10A 6V
In stock: 64434 pcs
RFQ

**JS1A-B-5V-F**
Manufacturers: Panasonic
Description: RELAY GEN PURPOSE SPST 10A 5V
In stock: 64468 pcs
RFQ

**Copyright © 2020 Reliable Distributor of Electronic Components**

E-mail: Info@infinity-electronic.com
Address: 17F, Gaylord Commercial Building, 114-118 Lockhart Road, Wan Chai, Hong Kong