Diodes Incorporated

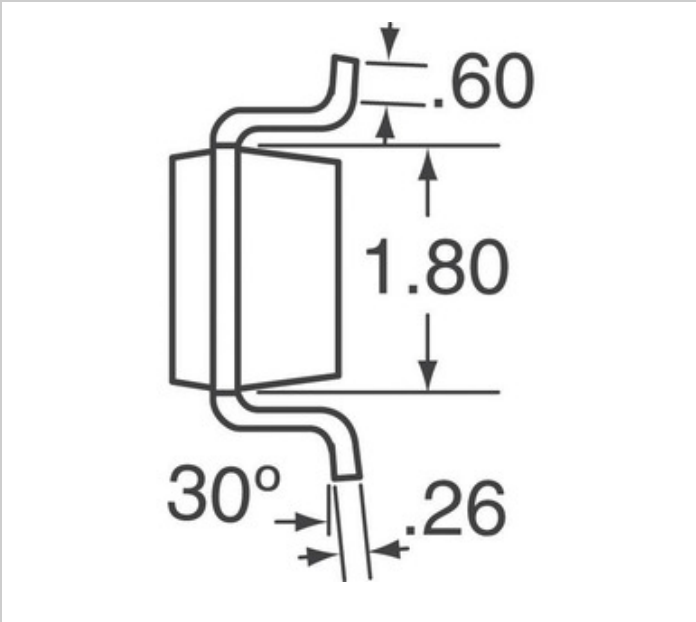

Image may be representation. See specifications for product details.

ZXCL330E5TA

Part Number:	ZXCL330E5TA
Manufacturer/Brand:	Diodes Incorporated
Product description	IC REG LINEAR 3.3V 150MA SOT23-5
Datasheets:	ZXCL330E5TA.pdf
RoHs Status	Lead free / RoHS Compliant
Stock Condition	359254 pcs stock
Ship From	Hong Kong
Shipment Way	DHL/Fedex/TNT/UPS/EMS

REQUEST FOR QUOTATION

Specifications of ZXCL330E5TA

PART NUMBER	ZXCL330E5TA
MANUFACTURER	Diodes Incorporated
DESCRIPTION	IC REG LINEAR 3.3V 150MA SOT23-5
LEAD FREE STATUS / ROHS STATUS	Lead free / RoHS Compliant
QUANTITY AVAILABLE	359254 pcs
DATA SHEET	ZXCL330E5TA.pdf
VOLTAGE DROPOUT (MAX)	0.28V @ 100mA
VOLTAGE - OUTPUT (MIN/FIXED)	3.3V
VOLTAGE - OUTPUT (MAX)	-
VOLTAGE - INPUT (MAX)	5.5V
SUPPLIER DEVICE PACKAGE	SOT-23-5
SERIES	-
PROTECTION FEATURES	Over Current, Over Temperature
PACKAGING	Tape & Reel (TR)
PACKAGE / CASE	SC-74A, SOT-753
PSRR	-
OUTPUT TYPE	Fixed
OUTPUT CONFIGURATION	Positive
OTHER NAMES	ZXCL330E5 ZXCL330E5TR
OPERATING TEMPERATURE	-40°C ~ 85°C
NUMBER OF REGULATORS	1
MOUNTING TYPE	Surface Mount
MOISTURE SENSITIVITY LEVEL (MSL)	1 (Unlimited)
LEAD FREE STATUS / ROHS STATUS	Lead free / RoHS Compliant
DETAILED DESCRIPTION	Linear Voltage Regulator IC Positive Fixed 1 Output 3.3V 150mA SOT-23-5
CURRENT - SUPPLY (MAX)	120µA
CURRENT - QUIESCENT (IQ)	50µA
CURRENT - OUTPUT	150mA
CONTROL FEATURES	Enable
BASE PART NUMBER	ZXCL330

Related Tags

Diodes Incorporated ZXCL330E5TA	ZXCL330E5TA Distributor	ZXCL330E5TA Supplier
ZXCL330E5TA Price	ZXCL330E5TA Pictures	ZXCL330E5TA Image
ZXCL330E5TA PDF Datasheet	ZXCL330E5TA Download Datasheet	ZXCL330E5TA Datasheet
ZXCL330E5TA Stock	Buy ZXCL330E5TA	Buy Diodes Incorporated ZXCL330E5TA
Diodes Incorporated ZXCL330E5TA	Diodes Incorporated Supplier	Diodes Incorporated Distributor
Diodes Incorporated ZXCL330E5TA	Diodes Inc ZXCL330E5TA	Pericom Semiconductor ZXCL330E5TA
Zetex Semiconductors (Diodes Incorporated) ZXCL330E5TA		

Related Products

ZXCL330H5TA
Manufacturers: Diodes Incorporated
Description: IC REG LINEAR 3.3V 150MA SC70-5
In stock: 373712 pcs
RFQ

ZXCL260H5TA
Manufacturers: Diodes Incorporated
Description: IC REG LINEAR 2.6V 150MA SC70-5
In stock: 343392 pcs
RFQ

ZXCL5213V28H5TA
Manufacturers: Diodes Incorporated
Description: IC REG LINEAR 2.8V 150MA SC70-5
In stock: 468608 pcs
RFQ

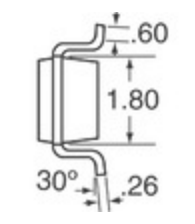

ZXCL280E5TA
Manufacturers: Diodes Incorporated
Description: IC REG LINEAR 2.8V 150MA SOT23-5
In stock: 127124 pcs
RFQ

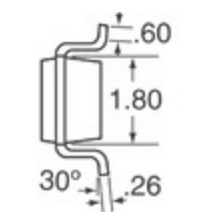

ZXCL300E5TA
Manufacturers: Diodes Incorporated
Description: IC REG LINEAR 3V 150MA SOT23-5
In stock: 145997 pcs
RFQ

ZXCL300H5TA
Manufacturers: Diodes Incorporated
Description: IC REG LINEAR 3V 150MA SC70-5
In stock: 5526 pcs
RFQ

ZXCL5213V25H5TA
Manufacturers: Diodes Incorporated
Description: IC REG LINEAR 2.5V 100MA SC70-5
In stock: 287392 pcs
RFQ

ZXCL5213V26H5TA
Manufacturers: Diodes Incorporated
Description: IC REG LINEAR 2.6V 150MA SC70-5
In stock: 376531 pcs
RFQ

ZXCL280H5TA
Manufacturers: Diodes Incorporated
Description: IC REG LINEAR 2.8V 150MA SC70-5
In stock: 6895 pcs
RFQ

ZXCL280H5TA
Manufacturers: Diodes Incorporated
Description: IC REG LDO 2.8V 0.15A SC70-5
In stock: 444485 pcs
RFQ

ZXCL400E5TA
Manufacturers: Diodes Incorporated
Description: IC REG LINEAR 4V 150MA SOT23-5
In stock: 6343 pcs
RFQ

ZXCL400H5TA
Manufacturers: Diodes Incorporated
Description: IC REG LINEAR 4V 150MA SC70-5
In stock: 3383 pcs
RFQ

Copyright © 2020 Reliable Distributor of Electronic Components

E-mail: Info@infinity-electronic.com
Address: 17F, Gaylord Commercial Building, 114-118 Lockhart Road, Wan Chai, Hong Kong