Honeywell | Honeywell Sensing and Productivity Solutions

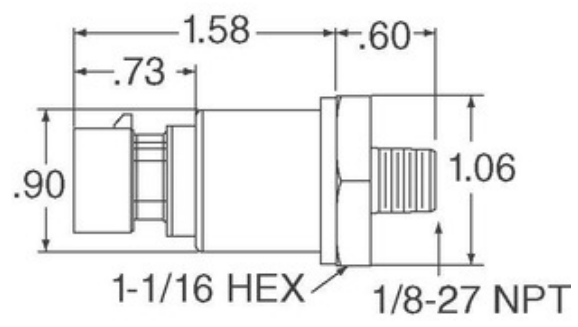

Image may be representation. See specifications for product details.

MLH02KPSM06A

Part Number:	MLH02KPSM06A
Manufacturer/Brand:	Honeywell Sensing and Productivity Solutions
Product description	SENSOR SEALED GAUGE 0-2000 PSI
Datasheets:	1.MLH02KPSM06A.pdf 2.MLH02KPSM06A.pdf
RoHs Status	Lead free / RoHS Compliant
Stock Condition	3989 pcs stock
Ship From	Hong Kong
Shipment Way	DHL/Fedex/TNT/UPS/EMS

REQUEST FOR QUOTATION

Specifications of MLH02KPSM06A

PART NUMBER	MLH02KPSM06A
MANUFACTURER	Honeywell Sensing and Productivity Solutions
DESCRIPTION	SENSOR SEALED GAUGE 0-2000 PSI
LEAD FREE STATUS / ROHS STATUS	Lead free / RoHS Compliant
QUANTITY AVAILABLE	3989 pcs
DATA SHEET	1.MLH02KPSM06A.pdf 2.MLH02KPSM06A.pdf
VOLTAGE - SUPPLY	5 V ~ 6 V
TERMINATION STYLE	Cable 3m
SUPPLIER DEVICE PACKAGE	-
SERIES	MLH
PRESSURE TYPE	Sealed Gauge
PORT STYLE	Threaded
PORT SIZE	Male - 1/8" (3.18mm) NPT
PACKAGE / CASE	Cylinder, Metal
OUTPUT TYPE	Analog Voltage
OUTPUT	0.5 V ~ 4.5 V
OPERATING TEMPERATURE	-40°C ~ 125°C
OPERATING PRESSURE	2000 PSI (13789.51 kPa)
MOISTURE SENSITIVITY LEVEL (MSL)	1 (Unlimited)
MAXIMUM PRESSURE	4000 PSI (27579.03 kPa)
LEAD FREE STATUS / ROHS STATUS	Lead free / RoHS Compliant
FEATURES	Amplified Output, Temperature Compensated
DETAILED DESCRIPTION	Pressure Sensor 2000 PSI (13789.51 kPa) Sealed Gauge Male - 1/8" (3.18mm) NPT 0.5 V ~ 4.5 V Cylinder, Metal
ACCURACY	±0.25%

Related Tags

Honeywell Sensing and Productivity Solutions MLH02KPSM06A	MLH02KPSM06A Distributor	MLH02KPSM06A Supplier
MLH02KPSM06A Price	MLH02KPSM06A Pictures	MLH02KPSM06A Image
MLH02KPSM06A PDF Datasheet	MLH02KPSM06A Download Datasheet	MLH02KPSM06A Datasheet
MLH02KPSM06A Stock	Buy MLH02KPSM06A	Buy Honeywell Sensing and Productivity Solutions MLH02KPSM06A
Honeywell Sensing and Productivity Solutions MLH02KPSM06A	Honeywell Sensing and Productivity Solutions Supplier	Honeywell Sensing and Productivity Solutions Distributor
Honeywell Sensing and Productivity Solutions MLH02KPSM06A	HONEYWELL MLH02KPSM06A	Honeywell Sensing and Control EMEA MLH02KPSM06A
Honeywell Sensing and Productivity Solutions T&M MLH02KPSM06A		

Related Products

MLH03KPGB01B
Manufacturers: Honeywell Sensing and Productivity Solutions
Description: SENSOR AMP 3000PSI 4-20MA OUT
In stock: 773 pcs
RFQ

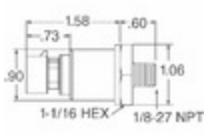

MLH02KPST10E
Manufacturers: Honeywell Sensing and Productivity Solutions
Description: MLH ALL METAL PRESS SENSE -ATF
In stock: 5542 pcs
RFQ

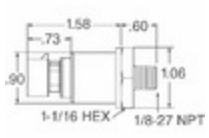

MLH02KPSB10A
Manufacturers: Honeywell Sensing and Productivity Solutions
Description: MLH ALL METAL PRESS SENSE -ATF
In stock: 1023 pcs
RFQ

MLH03KPSB01B
Manufacturers: Honeywell Sensing and Productivity Solutions
Description: SENSOR AMP 3000PSI 4-20MA OUT
In stock: 762 pcs
RFQ

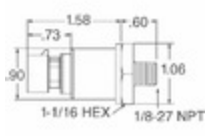

MLH02KPSG06A
Manufacturers: Honeywell Sensing and Productivity Solutions
Description: MLH ALL METAL PRESS SENSE -ATF
In stock: 1138 pcs
RFQ

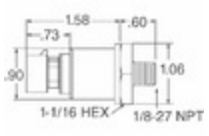

MLH03KPGL01C
Manufacturers: Honeywell Sensing and Productivity Solutions
Description: MLH ALL METAL PRESS SENSE -ATF
In stock: 4834 pcs
RFQ

MLH02KPSB06A
Manufacturers: Honeywell Sensing and Productivity Solutions
Description: SENSOR AMP 2000PSI .5-4.5VDC OUT
In stock: 901 pcs
RFQ

MLH02KPSL01A
Manufacturers: Honeywell Sensing and Productivity Solutions
Description: SENSOR SEALED GAUGE 0-2000 PSI
In stock: 934 pcs
RFQ

MLH02KPSL06A
Manufacturers: Honeywell Sensing and Productivity Solutions
Description: MLH ALL METAL PRESS SENSE -ATF
In stock: 889 pcs
RFQ

MLH03KPSB01A
Manufacturers: Honeywell Sensing and Productivity Solutions
Description: SENSOR AMP 3000PSI .5-4.5VDC OUT
In stock: 855 pcs
RFQ

MLH02KPSP01B
Manufacturers: Honeywell Sensing and Productivity Solutions
Description: SENSOR AMP 2000PSI 4-20MA OUT
In stock: 860 pcs
RFQ

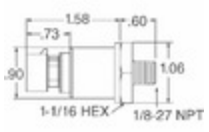

MLH02KPSD01A
Manufacturers: Honeywell Sensing and Productivity Solutions
Description: MLH ALL METAL PRESS SENSE -ATF
In stock: 4839 pcs
RFQ

Copyright © 2020 Reliable Distributor of Electronic Components

E-mail: Info@infinity-electronic.com
Address: 17F, Gaylord Commercial Building, 114-118 Lockhart Road, Wan Chai, Hong Kong