Honeywell | Honeywell Sensing and Productivity Solutions

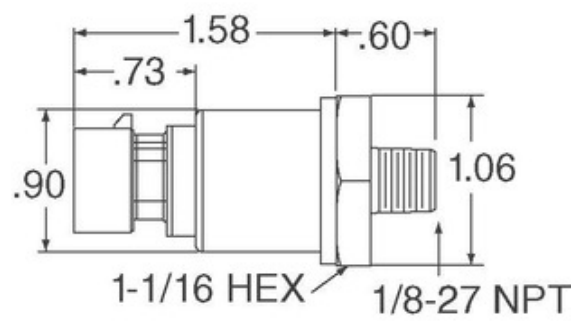

Image may be representation. See specifications for product details.

MLH700PSB09A

Part Number:	MLH700PSB09A
Manufacturer/Brand:	Honeywell Sensing and Productivity Solutions
Product description	MLH ALL METAL PRESS SENSE -ATF
Datasheets:	1.MLH700PSB09A.pdf 2.MLH700PSB09A.pdf
RoHs Status	Lead free / RoHS Compliant
Stock Condition	4176 pcs stock
Ship From	Hong Kong
Shipment Way	DHL/Fedex/TNT/UPS/EMS

REQUEST FOR QUOTATION

Specifications of MLH700PSB09A

PART NUMBER	MLH700PSB09A
MANUFACTURER	Honeywell Sensing and Productivity Solutions
DESCRIPTION	MLH ALL METAL PRESS SENSE -ATF
LEAD FREE STATUS / ROHS STATUS	Lead free / RoHS Compliant
QUANTITY AVAILABLE	4176 pcs
DATA SHEET	1.MLH700PSB09A.pdf 2.MLH700PSB09A.pdf
VOLTAGE - SUPPLY	5 V ~ 6 V
TERMINATION STYLE	Connector
SUPPLIER DEVICE PACKAGE	-
SERIES	MLH
PRESSURE TYPE	Sealed Gauge
PORT STYLE	Threaded
PORT SIZE	Female - 7/16" (11.11mm) UNF Schrader
PACKAGE / CASE	Cylinder, Metal
OUTPUT TYPE	Analog Voltage
OUTPUT	0.5 V ~ 4.5 V
OPERATING TEMPERATURE	-40°C ~ 125°C
OPERATING PRESSURE	700 PSI (4826.33 kPa)
MOISTURE SENSITIVITY LEVEL (MSL)	1 (Unlimited)
MAXIMUM PRESSURE	-
LEAD FREE STATUS / ROHS STATUS	Lead free / RoHS Compliant
FEATURES	Amplified Output, Temperature Compensated
DETAILED DESCRIPTION	Pressure Sensor 700 PSI (4826.33 kPa) Sealed Gauge Female - 7/16" (11.11mm) UNF Schrader 0.5 V ~ 4.5 V Cylinder, Metal
ACCURACY	±0.25%

Related Tags

Honeywell Sensing and Productivity Solutions MLH700PSB09A	MLH700PSB09A Distributor	MLH700PSB09A Supplier
MLH700PSB09A Price	MLH700PSB09A Pictures	MLH700PSB09A Image
MLH700PSB09A PDF Datasheet	MLH700PSB09A Download Datasheet	MLH700PSB09A Datasheet
MLH700PSB09A Stock	Buy MLH700PSB09A	Buy Honeywell Sensing and Productivity Solutions MLH700PSB09A
Honeywell Sensing and Productivity Solutions MLH700PSB09A	Honeywell Sensing and Productivity Solutions Supplier	Honeywell Sensing and Productivity Solutions Distributor
Honeywell Sensing and Productivity Solutions MLH700PSB09A	HONEYWELL MLH700PSB09A	Honeywell Sensing and Control EMEA MLH700PSB09A
Honeywell Sensing and Productivity Solutions T&M MLH700PSB09A		

Related Products

MLH600PSM09B
Manufacturers: Honeywell Sensing and Productivity Solutions
Description: SENSOR SEALED GAUGE 0-600 PSI
In stock: 3243 pcs
RFQ

MLH750PSP09B
Manufacturers: Honeywell Sensing and Productivity Solutions
Description: MLH ALL METAL PRESS SENSE -ATF
In stock: 3889 pcs
RFQ

MLH550BSD14C
Manufacturers: Honeywell Sensing and Productivity Solutions
Description: SENSOR SEALED GAUGE 0-550 BAR
In stock: 807 pcs
RFQ

MLH700PSB09D
Manufacturers: Honeywell Sensing and Productivity Solutions
Description: MLH ALL METAL PRESS SENSE -ATF
In stock: 982 pcs
RFQ

MLH600PSB09A
Manufacturers: Honeywell Sensing and Productivity Solutions
Description: SENSOR SEALED GAUGE 0-600 PSI
In stock: 3293 pcs
RFQ

MLH750PSB09A
Manufacturers: Honeywell Sensing and Productivity Solutions
Description: MLH ALL METAL PRESS SENSE -ATF
In stock: 6538 pcs
RFQ

MLH600PSB01A
Manufacturers: Honeywell Sensing and Productivity Solutions
Description: MLH ALL METAL PRESS SENSE -ATF
In stock: 3882 pcs
RFQ

MLH550BST01A
Manufacturers: Honeywell Sensing and Productivity Solutions
Description: MLH ALL METAL PRESS SENSE -ATF
In stock: 5265 pcs
RFQ

MLH550BSB01A
Manufacturers: Honeywell Sensing and Productivity Solutions
Description: MLH ALL METAL PRESS SENSE -ATF
In stock: 6071 pcs
RFQ

MLH500PST12E
Manufacturers: Honeywell Sensing and Productivity Solutions
Description: MLH ALL METAL PRESS SENSE -ATF
In stock: 945 pcs
RFQ

MLH550BSD14E
Manufacturers: Honeywell Sensing and Productivity Solutions
Description: SENSOR SEALED GAUGE 0-550 BAR
In stock: 991 pcs
RFQ

MLH500PST10A
Manufacturers: Honeywell Sensing and Productivity Solutions
Description: SENSOR AMP 500PSI .5-4.5VDC OUT
In stock: 1021 pcs
RFQ

Copyright © 2020 Reliable Distributor of Electronic Components
E-mail: Info@infinity-electronic.com
Address: 17F, Gaylord Commercial Building, 114-118 Lockhart Road, Wan Chai, Hong Kong