Honeywell | Honeywell Sensing and Productivity Solutions

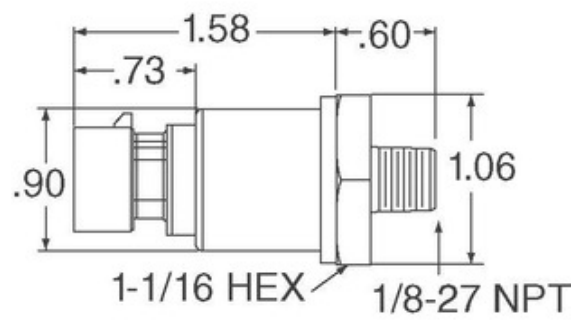

Image may be representation. See specifications for product details.

MLH040BSG02B

Part Number:	MLH040BSG02B
Manufacturer/Brand:	Honeywell Sensing and Productivity Solutions
Product description	MLH ALL METAL PRESS SENSE -ATF
Datasheets:	1.MLH040BSG02B.pdf 2.MLH040BSG02B.pdf
RoHs Status	Lead free / RoHS Compliant
Stock Condition	4624 pcs stock
Ship From	Hong Kong
Shipment Way	DHL/Fedex/TNT/UPS/EMS

REQUEST FOR QUOTATION

Specifications of MLH040BSG02B

PART NUMBER	MLH040BSG02B
MANUFACTURER	Honeywell Sensing and Productivity Solutions
DESCRIPTION	MLH ALL METAL PRESS SENSE -ATF
LEAD FREE STATUS / ROHS STATUS	Lead free / RoHS Compliant
QUANTITY AVAILABLE	4624 pcs
DATA SHEET	1.MLH040BSG02B.pdf 2.MLH040BSG02B.pdf
VOLTAGE - SUPPLY	9.5 V ~ 30 V
SUPPLIER DEVICE PACKAGE	-
SERIES	MLH
PRESSURE TYPE	Sealed Gauge
PORT STYLE	Threaded
PORT SIZE	Male - M12 x 1.5
PACKAGE / CASE	Cylinder, Metal
OUTPUT TYPE	Analog Current
OUTPUT	4 mA ~ 20 mA
OPERATING TEMPERATURE	-40°C ~ 125°C
OPERATING PRESSURE	580.15 PSI (4000 kPa)
MOISTURE SENSITIVITY LEVEL (MSL)	1 (Unlimited)
MAXIMUM PRESSURE	1160.3 PSI (8000 kPa)
LEAD FREE STATUS / ROHS STATUS	Lead free / RoHS Compliant
FEATURES	Amplified Output, Temperature Compensated
DETAILED DESCRIPTION	Pressure Sensor 580.15 PSI (4000 kPa) Sealed Gauge Male - M12 x 1.5 4 mA ~ 20 mA Cylinder, Metal
ACCURACY	±0.25%

Related Tags

Honeywell Sensing and Productivity Solutions MLH040BSG02B	MLH040BSG02B Distributor	MLH040BSG02B Supplier
MLH040BSG02B Price	MLH040BSG02B Pictures	MLH040BSG02B Image
MLH040BSG02B PDF Datasheet	MLH040BSG02B Download Datasheet	MLH040BSG02B Datasheet
MLH040BSG02B Stock	Buy MLH040BSG02B	Buy Honeywell Sensing and Productivity Solutions MLH040BSG02B
Honeywell Sensing and Productivity Solutions MLH040BSG02B	Honeywell Sensing and Productivity Solutions Supplier	Honeywell Sensing and Productivity Solutions Distributor
Honeywell Sensing and Productivity Solutions MLH040BSG02B	HONEYWELL MLH040BSG02B	Honeywell Sensing and Control EMEA MLH040BSG02B
Honeywell Sensing and Productivity Solutions T&M MLH040BSG02B		

Related Products

MLH040BST14E
Manufacturers: Honeywell Sensing and Productivity Solutions
Description: MLH ALL METAL PRESS SENSE -ATF
In stock: 999 pcs
RFQ

MLH040BSL04B
Manufacturers: Honeywell Sensing and Productivity Solutions
Description: SENSOR SEALED GAUGE 0-40 BAR
In stock: 867 pcs
RFQ

MLH040BSD14E
Manufacturers: Honeywell Sensing and Productivity Solutions
Description: SENSOR SEALED GAUGE 0-40 BAR
In stock: 3224 pcs
RFQ

MLH040BSD14A
Manufacturers: Honeywell Sensing and Productivity Solutions
Description: SENSOR SEALED GAUGE 0-40 BAR
In stock: 1077 pcs
RFQ

MLH040BSG13E
Manufacturers: Honeywell Sensing and Productivity Solutions
Description: MLH ALL METAL PRESS SENSE -ATF
In stock: 6668 pcs
RFQ

MLH040BSB01B
Manufacturers: Honeywell Sensing and Productivity Solutions
Description: SENSOR SEALED GAUGE 0-40 BAR
In stock: 938 pcs
RFQ

MLH040BSG13B
Manufacturers: Honeywell Sensing and Productivity Solutions
Description: MLH ALL METAL PRESS SENSE -ATF
In stock: 3899 pcs
RFQ

MLH040BSD14B
Manufacturers: Honeywell Sensing and Productivity Solutions
Description: SENSOR SEALED GAUGE 0-40 BAR
In stock: 3522 pcs
RFQ

MLH040BSL14A
Manufacturers: Honeywell Sensing and Productivity Solutions
Description: MLH ALL METAL PRESS SENSE -ATF
In stock: 936 pcs
RFQ

MLH040BSG01B
Manufacturers: Honeywell Sensing and Productivity Solutions
Description: SENSOR SEALED GAUGE 0-40 BAR
In stock: 6971 pcs
RFQ

MLH040BSG17B
Manufacturers: Honeywell Sensing and Productivity Solutions
Description: MLH ALL METAL PRESS SENSE -ATF
In stock: 862 pcs
RFQ

MLH040BSB09A
Manufacturers: Honeywell Sensing and Productivity Solutions
Description: SENSOR SEALED GAUGE 0-40 BAR
In stock: 3057 pcs
RFQ

Copyright © 2020 Reliable Distributor of Electronic Components

E-mail: Info@infinity-electronic.com
Address: 17F, Gaylord Commercial Building, 114-118 Lockhart Road, Wan Chai, Hong Kong