Panasonic | Panasonic

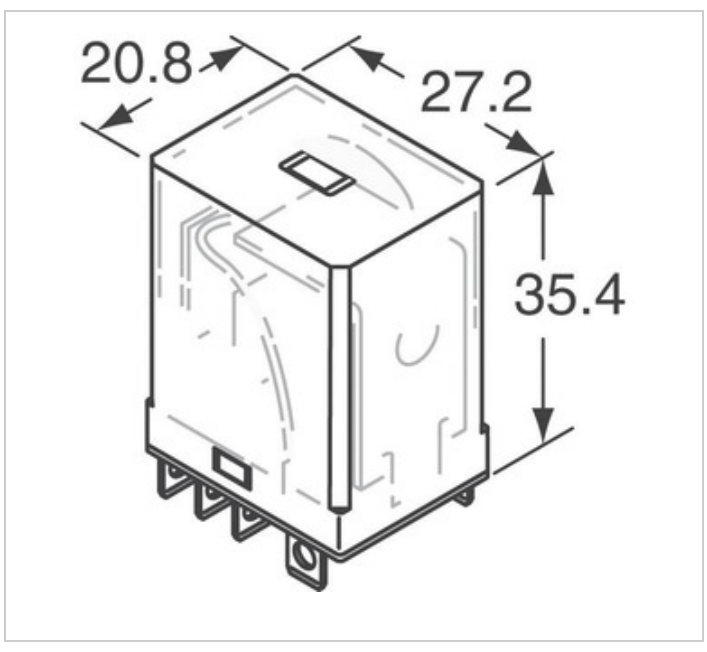


Image may be representation. See specifications for product details.

# HL1-H-AC12V-F

| | |
|---|---|
| Part Number: | HL1-H-AC12V-F |
| Manufacturer/Brand: | Panasonic |
| Product description | HL RELAY 1 FORM C 12VAC |
| Datasheets: | HL1-H-AC12V-F.pdf |
| RoHs Status | Lead free / RoHS Compliant |
| Stock Condition | 9538 pcs stock |
| Ship From | Hong Kong |
| Shipment Way | DHL/Fedex/TNT/UPS/EMS |

**REQUEST FOR QUOTATION**

## Specifications of HL1-H-AC12V-F

| | |
|---|---|
| PART NUMBER | HL1-H-AC12V-F |
| MANUFACTURER | Panasonic |
| DESCRIPTION | HL RELAY 1 FORM C 12VAC |
| LEAD FREE STATUS / ROHS STATUS | Lead free / RoHS Compliant |
| QUANTITY AVAILABLE | 9538 pcs |
| DATA SHEET | HL1-H-AC12V-F.pdf |
| SERIES | * |
| MOISTURE SENSITIVITY LEVEL (MSL) | 1 (Unlimited) |
| LEAD FREE STATUS / ROHS STATUS | Lead free / RoHS Compliant |
| DETAILED DESCRIPTION | Relay Coil |

## Related Tags

| | | |
|---|---|---|
| Panasonic HL1-H-AC12V-F | HL1-H-AC12V-F Distributor | HL1-H-AC12V-F Supplier |
| HL1-H-AC12V-F Price | HL1-H-AC12V-F Pictures | HL1-H-AC12V-F Image |
| HL1-H-AC12V-F PDF Datasheet | HL1-H-AC12V-F Download Datasheet | HL1-H-AC12V-F Datasheet |
| HL1-H-AC12V-F Stock | Buy HL1-H-AC12V-F | Buy Panasonic HL1-H-AC12V-F |
| Panasonic HL1-H-AC12V-F | Panasonic Supplier | Panasonic Distributor |
| Panasonic HL1-H-AC12V-F | Panasonic - Consumer Division HL1-H-AC12V-F | Panasonic - Consumer Electronics Corp. HL1-H-AC12V-F |
| Panasonic Battery Group HL1-H-AC12V-F | Panasonic Electric Works - ACSD HL1-H-AC12V-F | Panasonic Electronic Components - Semiconductor Pr HL1-H-AC12V-F |
| Panasonic - ATG HL1-H-AC12V-F | Panasonic - BSG HL1-H-AC12V-F | Panasonic - DTG HL1-H-AC12V-F |
| Panasonic Electric Works HL1-H-AC12V-F | Panasonic Electronic Components HL1-H-AC12V-F | Panasonic Industrial Automation Sales HL1-H-AC12V-F |
| Panasonic Semiconductor HL1-H-AC12V-F | | |

## Related Products

**HL1-H-AC24V**
Manufacturers: Panasonic
Description: RELAY GEN PURPOSE SPDT 15A 24V
In stock: 3124 pcs
RFQ

**HL1-H-AC200V-F**
Manufacturers: Panasonic
Description: RELAY GENERAL PURPOSE
In stock: 6573 pcs
RFQ

**HL1-H-AC240V-F**
Manufacturers: Panasonic
Description: RELAY GEN PURPOSE SPDT 15A 240V
In stock: 9944 pcs
RFQ

**HL1-H-AC115V-TV**
Manufacturers: Panasonic
Description: RELAY GEN PURPOSE SPDT 15A 115V
In stock: 6055 pcs
RFQ

**HL1-H-AC48V**
Manufacturers: Panasonic
Description: RELAY GEN PURPOSE SPDT 15A 48V
In stock: 4943 pcs
RFQ

**HL1-H-AC240V**
Manufacturers: Panasonic
Description: RELAY GEN PURPOSE SPDT 15A 240V
In stock: 3850 pcs
RFQ

**HL1-H-AC12V**
Manufacturers: Panasonic
Description: RELAY GEN PURPOSE SPDT 15A 12V
In stock: 4303 pcs
RFQ

**HL1-H-AC120V-F**
Manufacturers: Panasonic
Description: RELAY GEN PURPOSE SPDT 15A 120V
In stock: 8748 pcs
RFQ

**HL1-H-AC24V-F**
Manufacturers: Panasonic
Description: RELAY GEN PURPOSE SPDT 15A 24V
In stock: 7647 pcs
RFQ

**HL1-H-AC120V**
Manufacturers: Panasonic
Description: RELAY GEN PURPOSE SPDT 15A 120V
In stock: 7014 pcs
RFQ

**HL1-H-AC100V-F**
Manufacturers: Panasonic
Description: RELAY GEN PURPOSE SPDT 15A 100V
In stock: 8544 pcs
RFQ

**HL1-H-AC115V**
Manufacturers: Panasonic
Description: RELAY GEN PURPOSE SPDT 15A 115V
In stock: 5713 pcs
RFQ

**Copyright © 2020 Reliable Distributor of Electronic Components**
E-mail: Info@infinity-electronic.com
Address: 17F, Gaylord Commercial Building, 114-118 Lockhart Road, Wan Chai, Hong Kong