Honeywell | Honeywell Sensing and Productivity Solutions

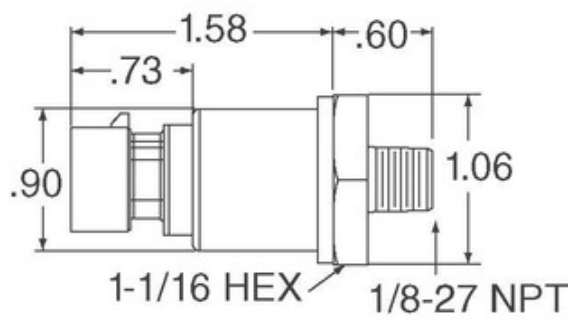

Image may be representation. See specifications for product details.

MLH150PSB01E

Part Number:	MLH150PSB01E
Manufacturer/Brand:	Honeywell Sensing and Productivity Solutions
Product description	SENSOR SEALED GAUGE 0-150 PSI
Datasheets:	1.MLH150PSB01E.pdf 2.MLH150PSB01E.pdf
RoHs Status	Lead free / RoHS Compliant
Stock Condition	832 pcs stock
Ship From	Hong Kong
Shipment Way	DHL/Fedex/TNT/UPS/EMS

REQUEST FOR QUOTATION

Specifications of MLH150PSB01E

PART NUMBER	MLH150PSB01E
MANUFACTURER	Honeywell Sensing and Productivity Solutions
DESCRIPTION	SENSOR SEALED GAUGE 0-150 PSI
LEAD FREE STATUS / ROHS STATUS	Lead free / RoHS Compliant
QUANTITY AVAILABLE	832 pcs
DATA SHEET	1.MLH150PSB01E.pdf 2.MLH150PSB01E.pdf
VOLTAGE - SUPPLY	7 V ~ 30 V
TERMINATION STYLE	Packard Metripak 150
SUPPLIER DEVICE PACKAGE	-
SERIES	MLH
PRESSURE TYPE	Sealed Gauge
PORT STYLE	Threaded
PORT SIZE	Male - 1/4" (6.35mm) NPT
PACKAGE / CASE	Cylinder, Metal
OUTPUT TYPE	Analog Voltage
OUTPUT	0.5 V ~ 4.5 V
OPERATING TEMPERATURE	-40°C ~ 125°C
OPERATING PRESSURE	150 PSI (1034.21 kPa)
MOISTURE SENSITIVITY LEVEL (MSL)	1 (Unlimited)
MAXIMUM PRESSURE	450 PSI (3102.64 kPa)
LEAD FREE STATUS / ROHS STATUS	Lead free / RoHS Compliant
FEATURES	Amplified Output, Temperature Compensated
DETAILED DESCRIPTION	Pressure Sensor 150 PSI (1034.21 kPa) Sealed Gauge Male - 1/4" (6.35mm) NPT 0.5 V ~ 4.5 V Cylinder, Metal
ACCURACY	±0.25%

Related Tags

- Honeywell Sensing and Productivity Solutions MLH150PSB01E
- MLH150PSB01E Distributor
- MLH150PSB01E Supplier
- MLH150PSB01E Price
- MLH150PSB01E Pictures
- MLH150PSB01E Image
- MLH150PSB01E PDF Datasheet
- MLH150PSB01E Download Datasheet
- MLH150PSB01E Datasheet
- MLH150PSB01E Stock
- Buy MLH150PSB01E
- Buy Honeywell Sensing and Productivity Solutions MLH150PSB01E
- Honeywell Sensing and Productivity Solutions MLH150PSB01E
- Honeywell Sensing and Productivity Solutions Supplier
- Honeywell Sensing and Productivity Solutions Distributor
- Honeywell Sensing and Productivity Solutions MLH150PSB01E
- HONEYWELL MLH150PSB01E
- Honeywell Sensing and Control EMEA MLH150PSB01E
- Honeywell Sensing and Productivity Solutions T&M MLH150PSB01E

Related Products

MLH150PGT12E
Manufacturers: Honeywell Sensing and Productivity Solutions
Description: MLH ALL METAL PRESS SENSE -ATF
In stock: 996 pcs
RFQ

MLH150PSB06A
Manufacturers: Honeywell Sensing and Productivity Solutions
Description: SENSOR SEALED GAUGE 0-150 PSI
In stock: 886 pcs
RFQ

MLH150PGP01E
Manufacturers: Honeywell Sensing and Productivity Solutions
Description: MLH ALL METAL PRESS SENSE -ATF
In stock: 5731 pcs
RFQ

MLH150PSB01B
Manufacturers: Honeywell Sensing and Productivity Solutions
Description: SENSOR AMP 150PSIS 4-20MA OUT
In stock: 1123 pcs
RFQ

MLH150PSB01A
Manufacturers: Honeywell Sensing and Productivity Solutions
Description: SENSOR AMP 150PSIS .5-4.5VDC OUT
In stock: 946 pcs
RFQ

MLH150PSL01B
Manufacturers: Honeywell Sensing and Productivity Solutions
Description: SENSOR SEALED GAUGE 0-150 PSI
In stock: 850 pcs
RFQ

MLH150PSB09A
Manufacturers: Honeywell Sensing and Productivity Solutions
Description: SENSOR SEALED GAUGE 0-150 PSI
In stock: 3919 pcs
RFQ

MLH160BSD14B
Manufacturers: Honeywell Sensing and Productivity Solutions
Description: SENSOR SEALED GAUGE 0-160 BAR
In stock: 1141 pcs
RFQ

MLH150PSB06B
Manufacturers: Honeywell Sensing and Productivity Solutions
Description: SENSOR SEALED GAUGE 0-150 PSI
In stock: 3163 pcs
RFQ

MLH150PGP06G
Manufacturers: Honeywell Sensing and Productivity Solutions
Description: MLH ALL METAL PRESS SENSE -ATF
In stock: 4176 pcs
RFQ

MLH150PGP06B
Manufacturers: Honeywell Sensing and Productivity Solutions
Description: SENSOR GAUGE 0-150 PSI
In stock: 1182 pcs
RFQ

MLH150PSG06B
Manufacturers: Honeywell Sensing and Productivity Solutions
Description: SENSOR SEALED GAUGE 0-150 PSI
In stock: 4192 pcs
RFQ

Copyright © 2020 Reliable Distributor of Electronic Components

E-mail: Info@infinity-electronic.com
Address: 17F, Gaylord Commercial Building, 114-118 Lockhart Road, Wan Chai, Hong Kong