Honeywell | Honeywell Sensing and Productivity Solutions

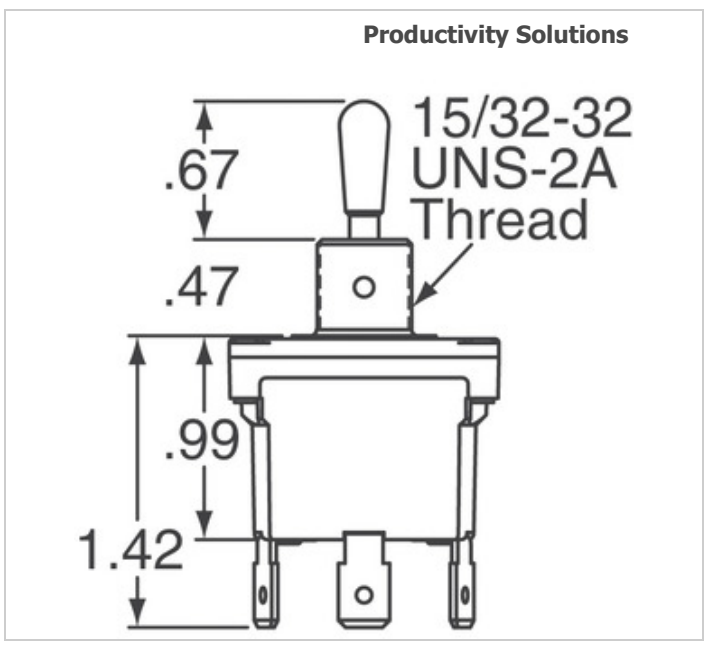

Image may be representation. See specifications for product details.

32NT91-4

Part Number:	32NT91-4
Manufacturer/Brand:	Honeywell Sensing and Productivity Solutions
Product description	SWITCH TOGGLE DPST-NC 10A 125V
Datasheets:	1.32NT91-4.pdf 2.32NT91-4.pdf 3.32NT91-4.pdf
RoHs Status	Lead free / RoHS Compliant
Stock Condition	4437 pcs stock
Ship From	Hong Kong
Shipment Way	DHL/Fedex/TNT/UPS/EMS

REQUEST FOR QUOTATION

Specifications of 32NT91-4

PART NUMBER	32NT91-4
MANUFACTURER	Honeywell Sensing and Productivity Solutions
DESCRIPTION	SWITCH TOGGLE DPST-NC 10A 125V
LEAD FREE STATUS / ROHS STATUS	Lead free / RoHS Compliant
QUANTITY AVAILABLE	4437 pcs
DATA SHEET	1.32NT91-4.pdf 2.32NT91-4.pdf 3.32NT91-4.pdf
VOLTAGE RATING - AC	125V
TERMINATION STYLE	Quick Connect - 0.250" (6.3mm)
SWITCH FUNCTION	On-Mom
SERIES	NT
PANEL CUTOUT DIMENSIONS	Circular - 12.40mm Dia
PACKAGING	Bulk
OPERATING TEMPERATURE	-40°C ~ 71°C
MOUNTING TYPE	Panel Mount
MOISTURE SENSITIVITY LEVEL (MSL)	1 (Unlimited)
LEAD FREE STATUS / ROHS STATUS	Lead free / RoHS Compliant
INGRESS PROTECTION	IP67/68 - Dust Tight, Waterproof
ILLUMINATION VOLTAGE (NOMINAL)	-
ILLUMINATION TYPE, COLOR	-
ILLUMINATION	Non-Illuminated
FEATURES	Sealed
ELECTRICAL LIFE	-
DETAILED DESCRIPTION	Toggle Switch DPST-NC Panel Mount
CURRENT RATING	10A (AC)
CIRCUIT	DPST-NC
BUSHING THREAD	15/32-32
ACTUATOR TYPE	Standard Round
ACTUATOR MATERIAL	-
ACTUATOR LENGTH	17.02mm

Related Tags

Honeywell Sensing and Productivity Solutions 32NT91-4	32NT91-4 Distributor	32NT91-4 Supplier
32NT91-4 Price	32NT91-4 Pictures	32NT91-4 Image
32NT91-4 PDF Datasheet	32NT91-4 Download Datasheet	32NT91-4 Datasheet
32NT91-4 Stock	Buy 32NT91-4	Buy Honeywell Sensing and Productivity Solutions 32NT91-4
Honeywell Sensing and Productivity Solutions 32NT91-4	Honeywell Sensing and Productivity Solutions Supplier	Honeywell Sensing and Productivity Solutions Distributor
Honeywell Sensing and Productivity Solutions 32NT91-4	HONEYWELL 32NT91-4	Honeywell Sensing and Control EMEA 32NT91-4
Honeywell Sensing and Productivity Solutions T&M 32NT91-4		

Related Products

32NT91-7
Manufacturers: Honeywell Sensing and Productivity Solutions
Description: SWITCH TOGGLE DPDT 10A 125V
In stock: 3430 pcs
RFQ

32NT91-6
Manufacturers: Honeywell Sensing and Productivity Solutions
Description: SWITCH TOGGLE DPST-NO 10A 125V
In stock: 3641 pcs
RFQ

32NT91-61
Manufacturers: Honeywell Sensing and Productivity Solutions
Description: SWITCH TOGGLE DPST-NO 10A 125V
In stock: 4459 pcs
RFQ

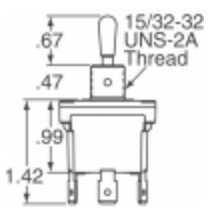

32NT91-5
Manufacturers: Honeywell Sensing and Productivity Solutions
Description: SWITCH TOGGLE DPDT 10A 125V
In stock: 4380 pcs
RFQ

32NT91-3
Manufacturers: Honeywell Sensing and Productivity Solutions
Description: SWITCH TOGGLE DPDT 15A 125V
In stock: 4816 pcs
RFQ

32NT91-70
Manufacturers: Honeywell Sensing and Productivity Solutions
Description: SWITCH TOGGLE DPDT 10A 125V
In stock: 3147 pcs
RFQ

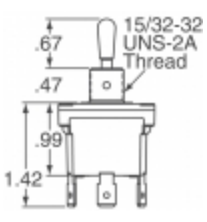

32NT91-12
Manufacturers: Honeywell Sensing and Productivity Solutions
Description: SWITCH TOGGLE DPDT 15A 125V
In stock: 2881 pcs
RFQ

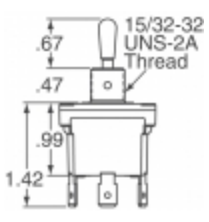

32NT91-21
Manufacturers: Honeywell Sensing and Productivity Solutions
Description: SWITCH TOGGLE DPST 15A 125V
In stock: 4670 pcs
RFQ

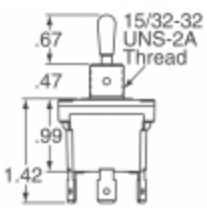

32NT91-227
Manufacturers: Honeywell Sensing and Productivity Solutions
Description: SWITCH TOGGLE DPDT 10A 125V
In stock: 3644 pcs
RFQ

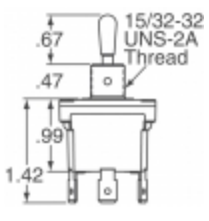

32NT91-31
Manufacturers: Honeywell Sensing and Productivity Solutions
Description: SWITCH TOGGLE DPDT 15A 125V
In stock: 4922 pcs
RFQ

32NT91-50
Manufacturers: Honeywell Sensing and Productivity Solutions
Description: SWITCH TOGGLE DPDT 10A 125V
In stock: 3300 pcs
RFQ

32NT91-2
Manufacturers: Honeywell Sensing and Productivity Solutions
Description: SWITCH TOGGLE DPST 15A 125V
In stock: 3994 pcs
RFQ

Copyright © 2020 Reliable Distributor of Electronic Components

E-mail: Info@infinity-electronic.com
Address: 17F, Gaylord Commercial Building, 114-118 Lockhart Road, Wan Chai, Hong Kong