Honeywell | Honeywell Sensing and Productivity Solutions

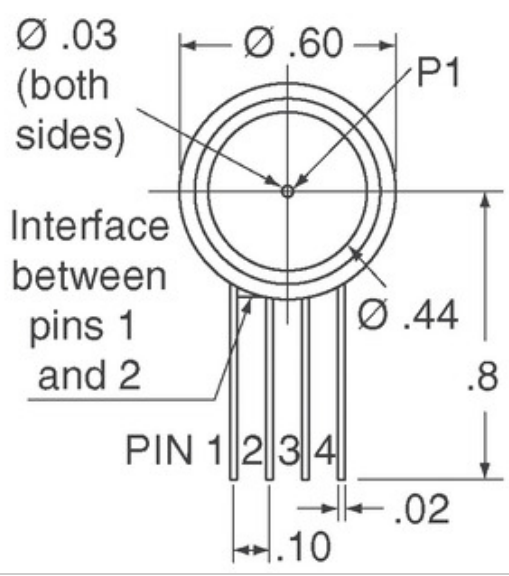

Image may be representation. See specifications for product details.

XPX100D

Part Number:	XPX100D
Manufacturer/Brand:	Honeywell Sensing and Productivity Solutions
Product description	XPX DIFF GAUGE VACCUM GAUGE
Datasheets:	1.XPX100D.pdf 2.XPX100D.pdf
RoHs Status	Lead free / RoHS Compliant
Stock Condition	6774 pcs stock
Ship From	Hong Kong
Shipment Way	DHL/Fedex/TNT/UPS/EMS

REQUEST FOR QUOTATION

Specifications of XPX100D

PART NUMBER	XPX100D
MANUFACTURER	Honeywell Sensing and Productivity Solutions
DESCRIPTION	XPX DIFF GAUGE VACCUM GAUGE
LEAD FREE STATUS / ROHS STATUS	Lead free / RoHS Compliant
QUANTITY AVAILABLE	6774 pcs
DATA SHEET	1.XPX100D.pdf 2.XPX100D.pdf
VOLTAGE - SUPPLY	3 V ~ 12 V
SUPPLIER DEVICE PACKAGE	-
SERIES	XPX
PRESSURE TYPE	Differential
PORT STYLE	No Port
PORT SIZE	-
PACKAGE / CASE	4-SIP Module
OUTPUT TYPE	Wheatstone Bridge
OUTPUT	0 mV ~ 295 mV (5V)
OPERATING TEMPERATURE	-25°C ~ 85°C
OPERATING PRESSURE	100 PSI (689.48 kPa)
MOISTURE SENSITIVITY LEVEL (MSL)	1 (Unlimited)
MAXIMUM PRESSURE	250 PSI (1723.69 kPa)
LEAD FREE STATUS / ROHS STATUS	Lead free / RoHS Compliant
FEATURES	-
DETAILED DESCRIPTION	Pressure Sensor 100 PSI (689.48 kPa) Differential 0 mV ~ 295 mV (5V) 4-SIP Module
ACCURACY	±1%

Related Tags

Honeywell Sensing and Productivity Solutions XPX100D	XPX100D Distributor	XPX100D Supplier
XPX100D Price	XPX100D Pictures	XPX100D Image
XPX100D PDF Datasheet	XPX100D Download Datasheet	XPX100D Datasheet
XPX100D Stock	Buy XPX100D	Buy Honeywell Sensing and Productivity Solutions XPX100D
Honeywell Sensing and Productivity Solutions XPX100D	Honeywell Sensing and Productivity Solutions Supplier	Honeywell Sensing and Productivity Solutions Distributor
Honeywell Sensing and Productivity Solutions XPX100D	HONEYWELL XPX100D	Honeywell Sensing and Control EMEA XPX100D
Honeywell Sensing and Productivity Solutions T&M XPX100D		

Related Products

P51-75-G-M-I36-20MA-000-000
Manufacturers: SSI Technologies, Inc.
Description: SENSOR 75PSI M10-1.0 6G 4-20MA
In stock: 534 pcs
RFQ

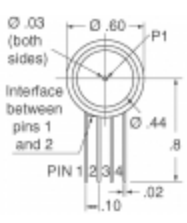

XPX15DT
Manufacturers: Honeywell Sensing and Productivity Solutions
Description: XPX DIFF GAUGE VACCUM GAUGE
In stock: 5336 pcs
RFQ

XPX150D
Manufacturers: Honeywell Sensing and Productivity Solutions
Description: SENSOR DIFF VACUUM GAUGE 150PSI
In stock: 2829 pcs
RFQ

P51-100-S-L-P-5V-000-000
Manufacturers: SSI Technologies, Inc.
Description: SENSOR 100PSIS M10 5V
In stock: 729 pcs
RFQ

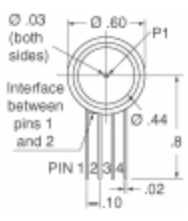

XPXL10DT
Manufacturers: Honeywell Sensing and Productivity Solutions
Description: SENSOR PRESS DIFF 10" H2O 4SIP
In stock: 5879 pcs
RFQ

P51-100-A-AF-D-20MA-000-000
Manufacturers: SSI Technologies, Inc.
Description: SENSOR 100PSI 9/16-18 UNF 4-20MA
In stock: 706 pcs
RFQ

XPX30DT
Manufacturers: Honeywell Sensing and Productivity Solutions
Description: XPX DIFF GAUGE VACCUM GAUGE
In stock: 4450 pcs
RFQ

XPX100GFS
Manufacturers: Honeywell Sensing and Productivity Solutions
Description: SENSOR VACUUM GAUGE 100PSI
In stock: 6423 pcs
RFQ

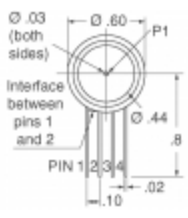

XPX15GFS
Manufacturers: Honeywell Sensing and Productivity Solutions
Description: XPX GAUGE VACUUM GAUGE SIGNAL
In stock: 4872 pcs
RFQ

XPX01D
Manufacturers: Honeywell Sensing and Productivity Solutions
Description: SENSOR DIFF VACUUM GAUGE 1PSI
In stock: 3519 pcs
RFQ

MPL115A1T1
Manufacturers: NXP
Description: IC BAROMETER SPI DGTL MINI 8-LGA
In stock: 12177 pcs
RFQ

XPX100DT
Manufacturers: Honeywell Sensing and Productivity Solutions
Description: SENSOR DIFF VACUUM GAUGE 100PSI
In stock: 3021 pcs
RFQ

Copyrigh **Dis** **nic Components**
E-mail: Inf .co
Address: 1 rcial Building, 114-118 Lockhart Road, Wan Chai, Hong Kong