Honeywell | Honeywell Sensing and Productivity Solutions

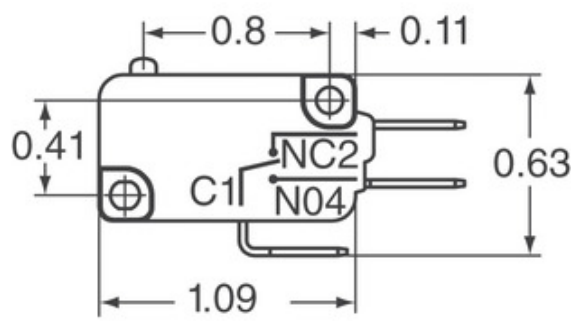

Image may be representation. See specifications for product details.

V15H22-CP200B03-K

Part Number:	V15H22-CP200B03-K
Manufacturer/Brand:	Honeywell Sensing and Productivity Solutions
Product description	SWITCH SNAP ACT SPST-NO 22A 250V
Datasheets:	1.V15H22-CP200B03-K.pdf 2.V15H22-CP200B03-K.pdf
RoHs Status	Lead free / RoHS Compliant
Stock Condition	3991 pcs stock
Ship From	Hong Kong
Shipment Way	DHL/Fedex/TNT/UPS/EMS

REQUEST FOR QUOTATION

Specifications of V15H22-CP200B03-K

PART NUMBER	V15H22-CP200B03-K
MANUFACTURER	Honeywell Sensing and Productivity Solutions
DESCRIPTION	SWITCH SNAP ACT SPST-NO 22A 250V
LEAD FREE STATUS / ROHS STATUS	Lead free / RoHS Compliant
QUANTITY AVAILABLE	3991 pcs
DATA SHEET	1.V15H22-CP200B03-K.pdf 2.V15H22-CP200B03-K.pdf
VOLTAGE RATING - AC	250V
TERMINATION STYLE	Quick Connect - 0.250" (6.3mm)
SWITCH FUNCTION	Off-Mom
SERIES	V15
RELEASE FORCE	8.000gf
PRETRAVEL	0.472" (12.0mm)
PACKAGING	Bulk
OVERTRAVEL	0.209" (5.3mm)
OPERATING TEMPERATURE	-25°C ~ 150°C
OPERATING POSITION	0.602" (15.3mm)
OPERATING FORCE	32gf
MOUNTING TYPE	Chassis Mount
MOISTURE SENSITIVITY LEVEL (MSL)	1 (Unlimited)
MECHANICAL LIFE	5,000,000 Cycles
LEAD FREE STATUS / ROHS STATUS	Lead free / RoHS Compliant
INGRESS PROTECTION	-
FEATURES	-
ELECTRICAL LIFE	10,000 Cycles
DIFFERENTIAL TRAVEL	0.138" (3.5mm)
CURRENT RATING	22A (AC)
CIRCUIT	SPST-NO
ACTUATOR TYPE	Lever, Straight

Related Tags

Honeywell Sensing and Productivity Solutions V15H22-CP200B03-K	V15H22-CP200B03-K Distributor	V15H22-CP200B03-K Supplier
V15H22-CP200B03-K Price	V15H22-CP200B03-K Pictures	V15H22-CP200B03-K Image
V15H22-CP200B03-K PDF Datasheet	V15H22-CP200B03-K Download Datasheet	V15H22-CP200B03-K Datasheet
V15H22-CP200B03-K Stock	Buy V15H22-CP200B03-K	Buy Honeywell Sensing and Productivity Solutions V15H22-CP200B03-K
Honeywell Sensing and Productivity Solutions V15H22-CP200B03-K	Honeywell Sensing and Productivity Solutions Supplier	Honeywell Sensing and Productivity Solutions Distributor
Honeywell Sensing and Productivity Solutions V15H22-CP200B03-K	HONEYWELL V15H22-CP200B03-K	Honeywell Sensing and Control EMEA V15H22-CP200B03-K
Honeywell Sensing and Productivity Solutions T&M V15H22-CP200B03-K		

Related Products

V15H16-EZ100A01-K
Manufacturers: Honeywell Sensing and Productivity Solutions
Description: SWITCH SNAP ACTION SPDT 16A 250V
In stock: 5517 pcs
RFQ

V15H22-CZ100-K
Manufacturers: Honeywell Sensing and Productivity Solutions
Description: SWITCH SNAP ACTION SPDT 22A 250V
In stock: 29035 pcs
RFQ

V15H22-CZ100
Manufacturers: Honeywell Sensing and Productivity Solutions
Description: BASIC SWITCH V BASICS V15
In stock: 57004 pcs
RFQ

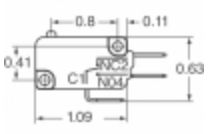

V15H22-CP100A02-K
Manufacturers: Honeywell Sensing and Productivity Solutions
Description: SWITCH SNAP ACT SPST-NO 22A 250V
In stock: 6566 pcs
RFQ

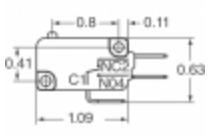

V15H22-CP400-K
Manufacturers: Honeywell Sensing and Productivity Solutions
Description: SWITCH SNAP ACT SPST-NO 22A 250V
In stock: 3635 pcs
RFQ

V15H16-EZ400-K
Manufacturers: Honeywell Sensing and Productivity Solutions
Description: SWITCH SNAP ACTION SPDT 16A 250V
In stock: 7055 pcs
RFQ

V15H16-EZ200A05
Manufacturers: Honeywell Sensing and Productivity Solutions
Description: BASIC SWITCH V BASICS V15
In stock: 45204 pcs
RFQ

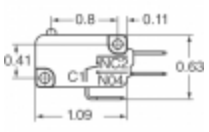

V15H22-CP400B03-K
Manufacturers: Honeywell Sensing and Productivity Solutions
Description: SWITCH SNAP ACT SPST-NO 22A 250V
In stock: 2846 pcs
RFQ

V15H16-EZ200B02-K
Manufacturers: Honeywell Sensing and Productivity Solutions
Description: SWITCH SNAP ACTION SPDT 16A 250V
In stock: 5513 pcs
RFQ

V15H16-EZ400A01-K
Manufacturers: Honeywell Sensing and Productivity Solutions
Description: SWITCH SNAP ACTION SPDT 16A 250V
In stock: 6431 pcs
RFQ

V15H22-CZ100A02
Manufacturers: Honeywell Sensing and Productivity Solutions
Description: BASIC SWITCH V BASICS V15
In stock: 55247 pcs
RFQ

V15H22-CZ100A02-K
Manufacturers: Honeywell Sensing and Productivity Solutions
Description: SWITCH SNAP ACTION SPDT 22A 250V
In stock: 25096 pcs
RFQ

Copyright © 2020 Reliable Distributor of Electronic Components

E-mail: Info@infinity-electronic.com
Address: 17F, Gaylord Commercial Building, 114-118 Lockhart Road, Wan Chai, Hong Kong