Honeywell | Honeywell Sensing and Productivity Solutions

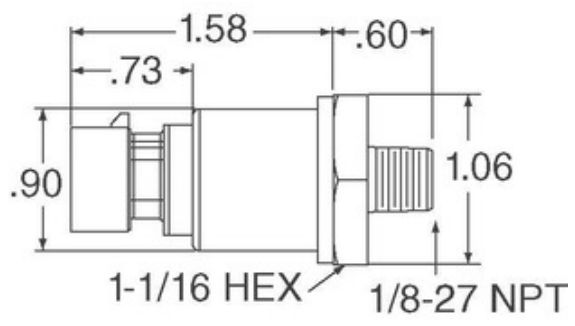


Image may be representation. See specifications for product details.

# MLH016BGB20B

| | |
|---|---|
| Part Number: | MLH016BGB20B |
| Manufacturer/Brand: | Honeywell Sensing and Productivity Solutions |
| Product description | MLH ALL METAL PRESS SENSE -ATF |
| Datasheets: | 1.MLH016BGB20B.pdf<br>2.MLH016BGB20B.pdf |
| RoHs Status | Lead free / RoHS Compliant |
| Stock Condition | 1067 pcs stock |
| Ship From | Hong Kong |
| Shipment Way | DHL/Fedex/TNT/UPS/EMS |

**REQUEST FOR QUOTATION**

## Specifications of MLH016BGB20B

| | |
|---|---|
| PART NUMBER | MLH016BGB20B |
| MANUFACTURER | Honeywell Sensing and Productivity Solutions |
| DESCRIPTION | MLH ALL METAL PRESS SENSE -ATF |
| LEAD FREE STATUS / ROHS STATUS | Lead free / RoHS Compliant |
| QUANTITY AVAILABLE | 1067 pcs |
| DATA SHEET | 1.MLH016BGB20B.pdf<br>2.MLH016BGB20B.pdf |
| VOLTAGE - SUPPLY | 9.5 V ~ 30 V |
| SUPPLIER DEVICE PACKAGE | - |
| SERIES | MLH |
| PRESSURE TYPE | Vented Gauge |
| PORT STYLE | Threaded |
| PORT SIZE | Male - M20 x 1.5 |
| PACKAGE / CASE | Cylinder, Metal |
| OUTPUT TYPE | Analog Current |
| OUTPUT | 4 mA ~ 20 mA |
| OPERATING TEMPERATURE | -40°C ~ 125°C |
| OPERATING PRESSURE | 232.06 PSI (1600 kPa) |
| MOISTURE SENSITIVITY LEVEL (MSL) | 1 (Unlimited) |
| MAXIMUM PRESSURE | 696.18 PSI (4800 kPa) |
| LEAD FREE STATUS / ROHS STATUS | Lead free / RoHS Compliant |
| FEATURES | Amplified Output, Temperature Compensated |
| DETAILED DESCRIPTION | Pressure Sensor 232.06 PSI (1600 kPa) Vented Gauge Male - M20 x 1.5 4 mA ~ 20 mA Cylinder, Metal |
| ACCURACY | ±0.25% |

## Related Tags

| | | |
|---|---|---|
| Honeywell Sensing and Productivity Solutions MLH016BGB20B | MLH016BGB20B Distributor | MLH016BGB20B Supplier |
| MLH016BGB20B Price | MLH016BGB20B Pictures | MLH016BGB20B Image |
| MLH016BGB20B PDF Datasheet | MLH016BGB20B Download Datasheet | MLH016BGB20B Datasheet |
| MLH016BGB20B Stock | Buy MLH016BGB20B | Buy Honeywell Sensing and Productivity Solutions MLH016BGB20B |
| Honeywell Sensing and Productivity Solutions MLH016BGB20B | Honeywell Sensing and Productivity Solutions Supplier | Honeywell Sensing and Productivity Solutions Distributor |
| Honeywell Sensing and Productivity Solutions MLH016BGB20B | HONEYWELL MLH016BGB20B | Honeywell Sensing and Control EMEA MLH016BGB20B |
| Honeywell Sensing and Productivity Solutions T&M MLH016BGB20B | | |

## Related Products

**MLH016BGB06B**
Manufacturers: Honeywell Sensing and Productivity Solutions
Description: MLH ALL METAL PRESS SENSE -ATF
In stock: 3802 pcs
RFQ

**MLH016BGD14E**
Manufacturers: Honeywell Sensing and Productivity Solutions
Description: SENSOR GAUGE 0-16 BAR
In stock: 833 pcs
RFQ

**MLH016BGG01E**
Manufacturers: Honeywell Sensing and Productivity Solutions
Description: SENSOR GAUGE 0-16 BAR
In stock: 880 pcs
RFQ

**MLH016BGD14A**
Manufacturers: Honeywell Sensing and Productivity Solutions
Description: SENSOR GAUGE 0-16 BAR
In stock: 974 pcs
RFQ

**MLH016BGB01B**
Manufacturers: Honeywell Sensing and Productivity Solutions
Description: SENSOR GAUGE 0-16 BAR
In stock: 1033 pcs
RFQ

**MLH010BSL01A**
Manufacturers: Honeywell Sensing and Productivity Solutions
Description: MLH ALL METAL PRESS SENSE -ATF
In stock: 6915 pcs
RFQ

**MLH016BGD17D**
Manufacturers: Honeywell Sensing and Productivity Solutions
Description: MLH ALL METAL PRESS SENSE -ATF
In stock: 875 pcs
RFQ

**MLH016BGD14B**
Manufacturers: Honeywell Sensing and Productivity Solutions
Description: SENSOR GAUGE 0-16 BAR
In stock: 975 pcs
RFQ

**MLH010KSC14G**
Manufacturers: Honeywell Sensing and Productivity Solutions
Description: MLH ALL METAL PRESS SENSE
In stock: 722 pcs
RFQ

**MLH010BSL06B**
Manufacturers: Honeywell Sensing and Productivity Solutions
Description: SENSOR SEALED GAUGE 0-10 BAR
In stock: 6324 pcs
RFQ

**MLH010BST14A**
Manufacturers: Honeywell Sensing and Productivity Solutions
Description: MLH ALL METAL PRESS SENSE -ATF
In stock: 4204 pcs
RFQ

**MLH016BGG01B**
Manufacturers: Honeywell Sensing and Productivity Solutions
Description: MLH ALL METAL PRESS SENSE -ATF
In stock: 3734 pcs
RFQ

**Copyright © 2020 Reliable Distributor of Electronic Components**

E-mail: Info@infinity-electronic.com
Address: 17F, Gaylord Commercial Building, 114-118 Lockhart Road, Wan Chai, Hong Kong