Honeywell | Honeywell Sensing and Productivity Solutions

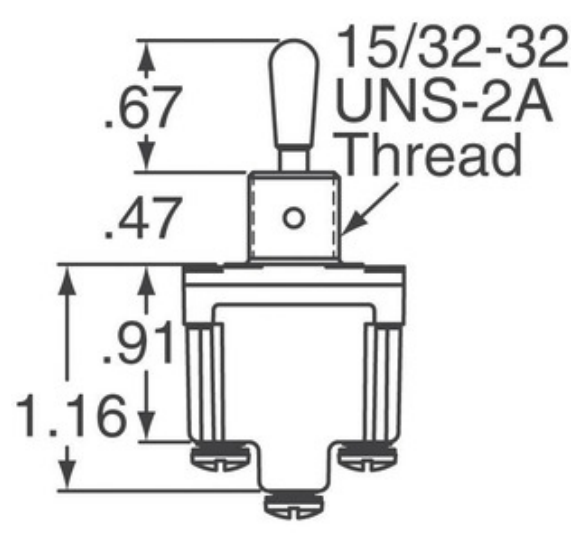

Image may be representation. See specifications for product details.

1NT1-5N

Part Number:	1NT1-5N
Manufacturer/Brand:	Honeywell Sensing and Productivity Solutions
Product description	SWITCH TOGGLE SPDT 10A 125V
Datasheets:	1.1NT1-5N.pdf 2.1NT1-5N.pdf 3.1NT1-5N.pdf
RoHs Status	Lead free / RoHS Compliant
Stock Condition	3327 pcs stock
Ship From	Hong Kong
Shipment Way	DHL/Fedex/TNT/UPS/EMS

REQUEST FOR QUOTATION

Specifications of 1NT1-5N

PART NUMBER	1NT1-5N
MANUFACTURER	Honeywell Sensing and Productivity Solutions
DESCRIPTION	SWITCH TOGGLE SPDT 10A 125V
LEAD FREE STATUS / ROHS STATUS	Lead free / RoHS Compliant
QUANTITY AVAILABLE	3327 pcs
DATA SHEET	1.1NT1-5N.pdf 2.1NT1-5N.pdf 3.1NT1-5N.pdf
VOLTAGE RATING - AC	125V
TERMINATION STYLE	Screw Terminal
SWITCH FUNCTION	On-Off-Mom
SERIES	NT
PANEL CUTOUT DIMENSIONS	Circular - 12.40mm Dia
PACKAGING	Bulk
OPERATING TEMPERATURE	-40°C ~ 71°C
MOUNTING TYPE	Panel Mount
MOISTURE SENSITIVITY LEVEL (MSL)	1 (Unlimited)
LEAD FREE STATUS / ROHS STATUS	Lead free / RoHS Compliant
INGRESS PROTECTION	IP67/68 - Dust Tight, Waterproof
ILLUMINATION VOLTAGE (NOMINAL)	-
ILLUMINATION TYPE, COLOR	-
ILLUMINATION	Non-Illuminated
FEATURES	Sealed
ELECTRICAL LIFE	-
DETAILED DESCRIPTION	Toggle Switch SPDT Panel Mount
CURRENT RATING	10A (AC)
CIRCUIT	SPDT
BUSHING THREAD	15/32-32
ACTUATOR TYPE	Locking Lever
ACTUATOR MATERIAL	-
ACTUATOR LENGTH	26.67mm

Related Tags

Honeywell Sensing and Productivity Solutions 1NT1-5N	1NT1-5N Distributor	1NT1-5N Supplier
1NT1-5N Price	1NT1-5N Pictures	1NT1-5N Image
1NT1-5N PDF Datasheet	1NT1-5N Download Datasheet	1NT1-5N Datasheet
1NT1-5N Stock	Buy 1NT1-5N	Buy Honeywell Sensing and Productivity Solutions 1NT1-5N
Honeywell Sensing and Productivity Solutions 1NT1-5N	Honeywell Sensing and Productivity Solutions Supplier	Honeywell Sensing and Productivity Solutions Distributor
Honeywell Sensing and Productivity Solutions 1NT1-5N	HONEYWELL 1NT1-5N	Honeywell Sensing and Control EMEA 1NT1-5N
Honeywell Sensing and Productivity Solutions T&M 1NT1-5N		

Related Products

1NT1-7-COMB
Manufacturers: Honeywell Sensing and Productivity Solutions
Description: SWITCH TOGGLE SPDT 10A 125V
In stock: 6114 pcs
RFQ

1NT1-7
Manufacturers: Honeywell Sensing and Productivity Solutions
Description: SWITCH TOGGLE SPDT 10A 125V
In stock: 3907 pcs
RFQ

1NT1-3D
Manufacturers: Honeywell Sensing and Productivity Solutions
Description: SWITCH TOGGLE SPDT 15A 125V
In stock: 3645 pcs
RFQ

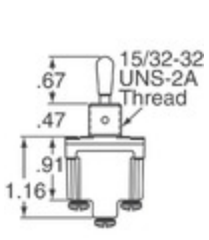

1NT1-61
Manufacturers: Honeywell Sensing and Productivity Solutions
Description: SWITCH TOGGLE SPST-NO 10A 125V
In stock: 6224 pcs
RFQ

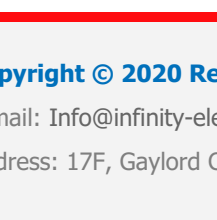

1NT1-6F
Manufacturers: Honeywell Sensing and Productivity Solutions
Description: SWITCH TOGGLE SPST-NO 10A 125V
In stock: 3306 pcs
RFQ

1NT1-3F
Manufacturers: Honeywell Sensing and Productivity Solutions
Description: SWITCH TOGGLE SPDT 15A 125V
In stock: 3401 pcs
RFQ

1NT1-7-JLG
Manufacturers: Honeywell Sensing and Productivity Solutions
Description: SWITCH TOGGLE SPDT 10A 125V
In stock: 6807 pcs
RFQ

1NT1-51
Manufacturers: Honeywell Sensing and Productivity Solutions
Description: SWITCH TOGGLE SPDT 10A 125V
In stock: 6261 pcs
RFQ

1NT1-6
Manufacturers: Honeywell Sensing and Productivity Solutions
Description: SWITCH TOGGLE SPST-NO 10A 125V
In stock: 4947 pcs
RFQ

1NT1-5
Manufacturers: Honeywell Sensing and Productivity Solutions
Description: SWITCH TOGGLE SPDT 10A 125V
In stock: 4451 pcs
RFQ

1NT1-4
Manufacturers: Honeywell Sensing and Productivity Solutions
Description: SWITCH TOGGLE SPST-NC 10A 125V
In stock: 6425 pcs
RFQ

1NT1-31
Manufacturers: Honeywell Sensing and Productivity Solutions
Description: SWITCH TOGGLE SPDT 15A 125V
In stock: 6337 pcs
RFQ

Copyright © 2020 Reliable Distributor of Electronic Components

E-mail: Info@infinity-electronic.com
Address: 17F, Gaylord Commercial Building, 114-118 Lockhart Road, Wan Chai, Hong Kong