Honeywell | Honeywell Sensing and Productivity Solutions

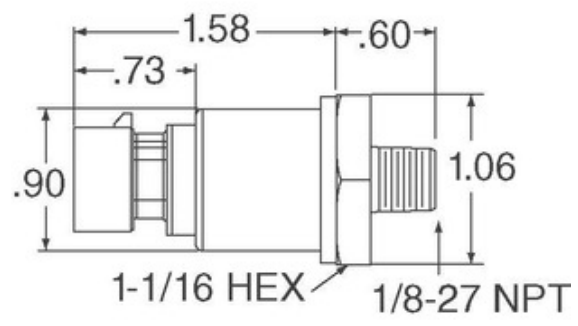


Image may be representation. See specifications for product details.

# MLH03KPGL01C

| | |
|---|---|
| Part Number: | MLH03KPGL01C |
| Manufacturer/Brand: | Honeywell Sensing and Productivity Solutions |
| Product description | MLH ALL METAL PRESS SENSE -ATF |
| Datasheets: | 1.MLH03KPGL01C.pdf<br>2.MLH03KPGL01C.pdf |
| RoHs Status | Lead free / RoHS Compliant |
| Stock Condition | 4834 pcs stock |
| Ship From | Hong Kong |
| Shipment Way | DHL/Fedex/TNT/UPS/EMS |

**REQUEST FOR QUOTATION**

## Specifications of MLH03KPGL01C

| | |
|---|---|
| PART NUMBER | MLH03KPGL01C |
| MANUFACTURER | Honeywell Sensing and Productivity Solutions |
| DESCRIPTION | MLH ALL METAL PRESS SENSE -ATF |
| LEAD FREE STATUS / ROHS STATUS | Lead free / RoHS Compliant |
| QUANTITY AVAILABLE | 4834 pcs |
| DATA SHEET | 1.MLH03KPGL01C.pdf<br>2.MLH03KPGL01C.pdf |
| VOLTAGE - SUPPLY | 8 V ~ 30 V |
| SUPPLIER DEVICE PACKAGE | - |
| SERIES | MLH |
| PRESSURE TYPE | Vented Gauge |
| PORT STYLE | Threaded |
| PORT SIZE | Male - 1/4" (6.35mm) NPT |
| PACKAGE / CASE | Cylinder, Metal |
| OUTPUT TYPE | Analog Voltage |
| OUTPUT | 1 V ~ 6 V |
| OPERATING TEMPERATURE | -40°C ~ 125°C |
| OPERATING PRESSURE | 3000 PSI (20684.27 kPa) |
| MOISTURE SENSITIVITY LEVEL (MSL) | 1 (Unlimited) |
| MAXIMUM PRESSURE | 6000 PSI (41368.54 kPa) |
| LEAD FREE STATUS / ROHS STATUS | Lead free / RoHS Compliant |
| FEATURES | Amplified Output, Temperature Compensated |
| DETAILED DESCRIPTION | Pressure Sensor 3000 PSI (20684.27 kPa) Vented Gauge Male - 1/4" (6.35mm) NPT 1 V ~ 6 V Cylinder, Metal |
| ACCURACY | ±0.25% |

## Related Tags

- Honeywell Sensing and Productivity Solutions MLH03KPGL01C
- MLH03KPGL01C Distributor
- MLH03KPGL01C Supplier
- MLH03KPGL01C Price
- MLH03KPGL01C Pictures
- MLH03KPGL01C Image
- MLH03KPGL01C PDF Datasheet
- MLH03KPGL01C Download Datasheet
- MLH03KPGL01C Datasheet
- MLH03KPGL01C Stock
- Buy MLH03KPGL01C
- Buy Honeywell Sensing and Productivity Solutions MLH03KPGL01C
- Honeywell Sensing and Productivity Solutions MLH03KPGL01C
- Honeywell Sensing and Productivity Solutions Supplier
- Honeywell Sensing and Productivity Solutions Distributor
- Honeywell Sensing and Productivity Solutions MLH03KPGL01C
- HONEYWELL MLH03KPGL01C
- Honeywell Sensing and Control EMEA MLH03KPGL01C
- Honeywell Sensing and Productivity Solutions T&M MLH03KPGL01C

## Related Products

**MLH03KPSB01B**
Manufacturers: Honeywell Sensing and Productivity Solutions
Description: SENSOR AMP 3000PSI 4-20MA OUT
In stock: 762 pcs
RFQ

**MLH03KPSB01A**
Manufacturers: Honeywell Sensing and Productivity Solutions
Description: SENSOR AMP 3000PSI .5-4.5VDC OUT
In stock: 855 pcs
RFQ

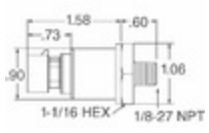

**MLH03KPSB01C**
Manufacturers: Honeywell Sensing and Productivity Solutions
Description: MLH ALL METAL PRESS SENSE -ATF
In stock: 5884 pcs
RFQ

**MLH02KPSL01A**
Manufacturers: Honeywell Sensing and Productivity Solutions
Description: SENSOR SEALED GAUGE 0-2000 PSI
In stock: 934 pcs
RFQ

**MLH03KPGB01B**
Manufacturers: Honeywell Sensing and Productivity Solutions
Description: SENSOR AMP 3000PSI 4-20MA OUT
In stock: 773 pcs
RFQ

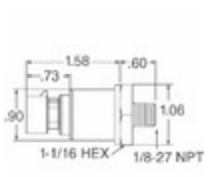

**MLH02KPST10E**
Manufacturers: Honeywell Sensing and Productivity Solutions
Description: MLH ALL METAL PRESS SENSE -ATF
In stock: 5542 pcs
RFQ

**MLH03KPSB01G**
Manufacturers: Honeywell Sensing and Productivity Solutions
Description: SENSOR AMP 3000PSI 1-5VDC OUT
In stock: 786 pcs
RFQ

**MLH02KPSL06A**
Manufacturers: Honeywell Sensing and Productivity Solutions
Description: MLH ALL METAL PRESS SENSE -ATF
In stock: 889 pcs
RFQ

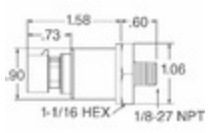

**MLH02KPSM06A**
Manufacturers: Honeywell Sensing and Productivity Solutions
Description: SENSOR SEALED GAUGE 0-2000 PSI
In stock: 3989 pcs
RFQ

**MLH03KPSB06A**
Manufacturers: Honeywell Sensing and Productivity Solutions
Description: SENSOR AMP 3000PSI .5-4.5VDC OUT
In stock: 980 pcs
RFQ

**MLH03KPSB06B**
Manufacturers: Honeywell Sensing and Productivity Solutions
Description: SENSOR AMP 3000PSI 4-20MA OUT
In stock: 1193 pcs
RFQ

**MLH02KPSP01B**
Manufacturers: Honeywell Sensing and Productivity Solutions
Description: SENSOR AMP 2000PSI 4-20MA OUT
In stock: 860 pcs
RFQ

**Copyright © 2020 Reliable Distributor of Electronic Components**

E-mail: Info@infinity-electronic.com
Address: 17F, Gaylord Commercial Building, 114-118 Lockhart Road, Wan Chai, Hong Kong